Short-Circuit Analysis IEC Standard

Purpose of Short-Circuit Studies

- A Short-Circuit Study can be used to determine any or all of the following:
  - Verify protective device close and latch capability
  - Verify protective device interrupting capability
  - Protect equipment from large mechanical forces (maximum fault kA)
  - I^2t protection for equipment (thermal stress)
  - Selecting ratings or settings for relay coordination

Types of Short-Circuit Faults

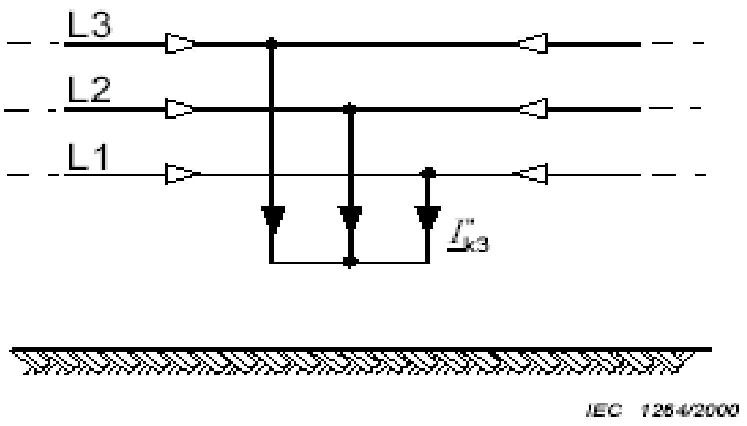
L3
L2
L1
I"k3
IEC 1264/2000

Figure 3a – Three-phase short circuit

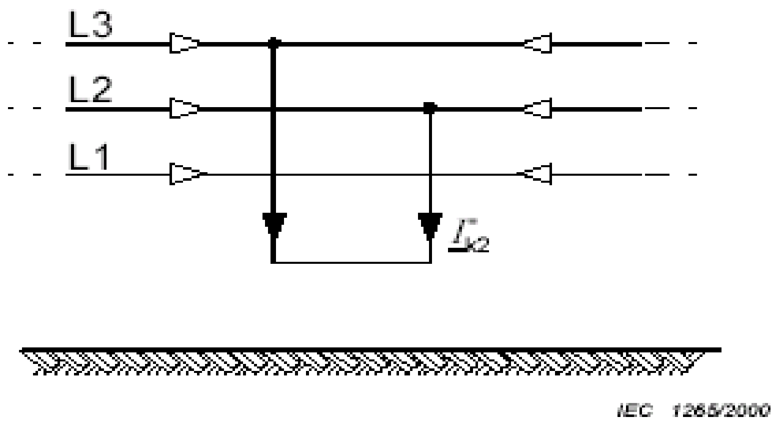
L3
L2
L1
I"k2
IEC 1265/2000

Figure 3b – Line-to-line short circuit

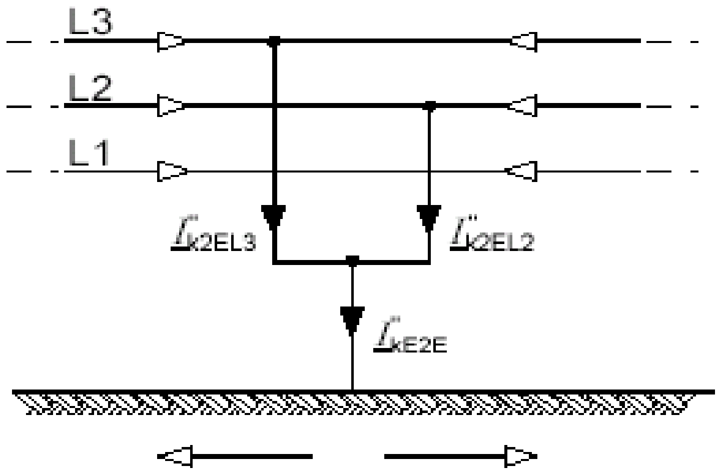
L3
L2
L1
I"k2EL3
I"k2EL2
I"kE2E

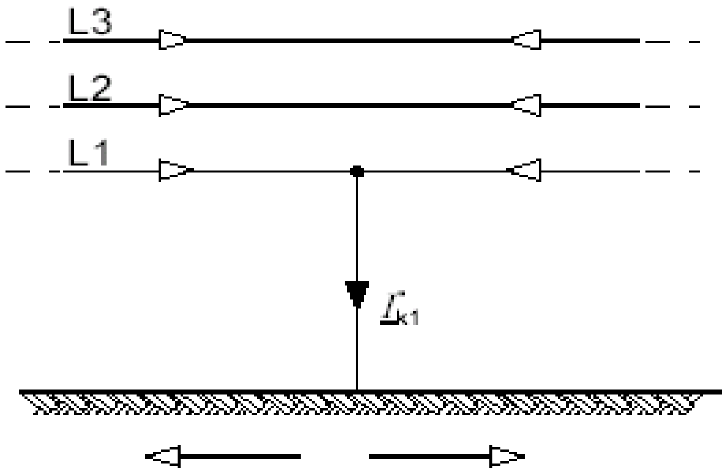

Short-circuit current

Partial short-circuit currents in conductors and earth return

Types of Short-Circuit Faults

Types of SC Faults

- Three-Phase Ungrounded Fault
- Three-Phase Grounded Fault
- Phase to Phase Ungrounded Fault
- Phase to Phase Grounded Fault
- Phase to Ground Fault

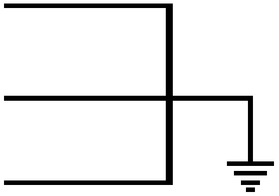

3-Phase Fault

L-G Fault

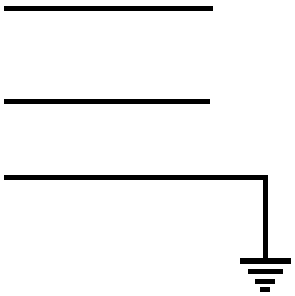

Fault Current

- I_{L-G} can range in utility systems from a few percent to possibly 115 % (if $X_o < X_1$) of $I_{3\text{-phase}}$ (85% of all faults).
- In industrial systems the situation $I_{L-G} > I_{3\text{-phase}}$ is rare. Typically $I_{L-G} \cong .87 * I_{3\text{-phase}}$
- In an industrial system, the three-phase fault condition is frequently the only one considered, since this type of fault generally results in Maximum current.

L-L fault

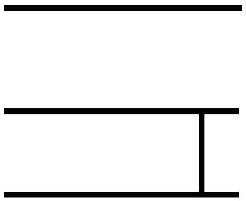

L-L-G fault

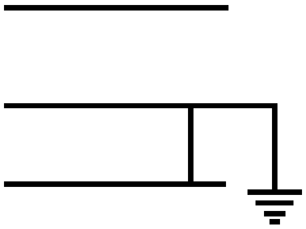

Short-Circuit Phenomenon

One-Line Diagram in PowerStation

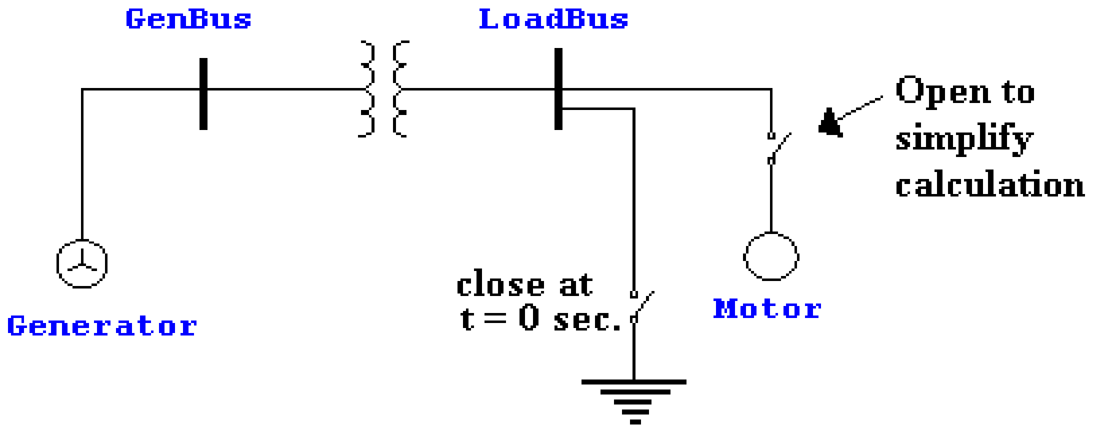
GenBus
LoadBus
Generator
close at
t = 0 sec.
Motor

Open to simplify calculation

Equivalent Impedance Diagram

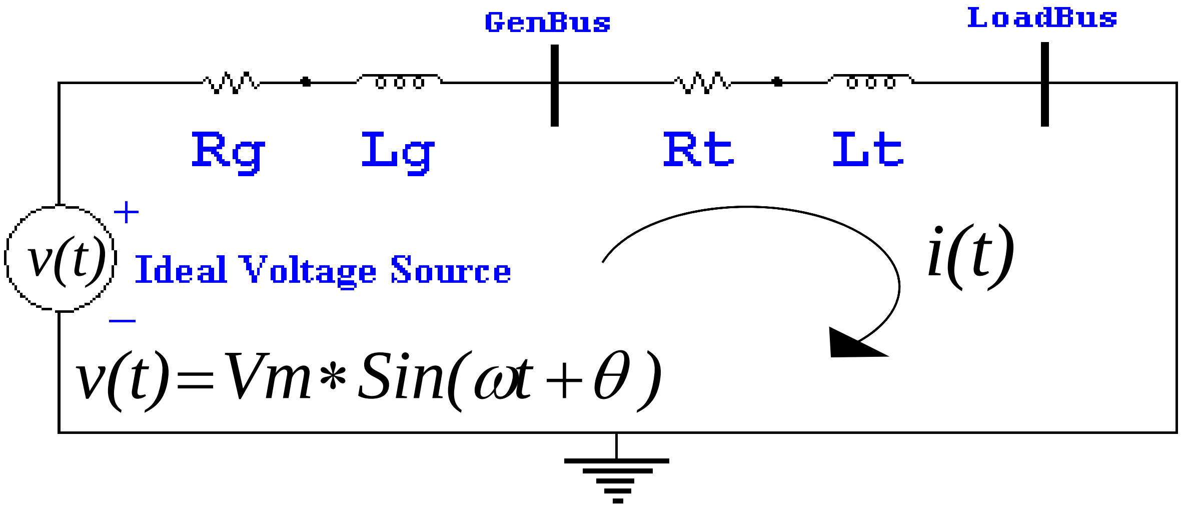
GenBus
LoadBus
Rg
Lg
Rt
Lt
+
v(t)
–
i(t)

Ideal Voltage Source

$$v(t) = Vm * Sin(\omega t + \theta)$$

Thevenin Equivalent

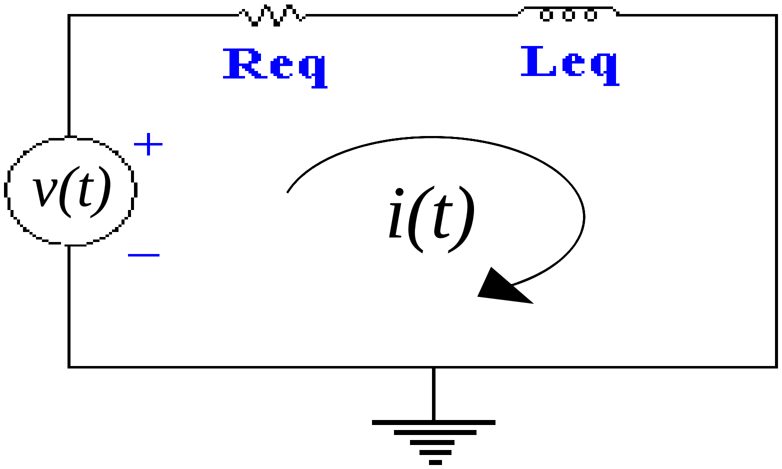

$$\mathbf{v(t)} = \mathbf{Ri} + \mathbf{L}\frac{\mathbf{di}}{\mathbf{dt}} = \mathbf{Vm} \times \mathbf{Sin}(\omega \mathbf{t} + \theta) \qquad \mathbf{(1)}$$

Solving equation 1 yields the following expression

$$\mathbf{i(t)} = \underbrace{\frac{\mathbf{Vm}}{|\mathbf{Z}|} \times \mathbf{sin}(\omega \mathbf{t} + \theta - \phi)}_{\textbf{Steady State}} + \underbrace{\frac{\mathbf{Vm}}{|\mathbf{Z}|} \times \mathbf{sin}(\theta - \phi) \times e^{-\frac{R}{L}\mathbf{t}}}_{\substack{\textbf{Transient}\\ \textbf{(DC Offset)}}}$$

AC Current (Symmetrical) with No AC Decay

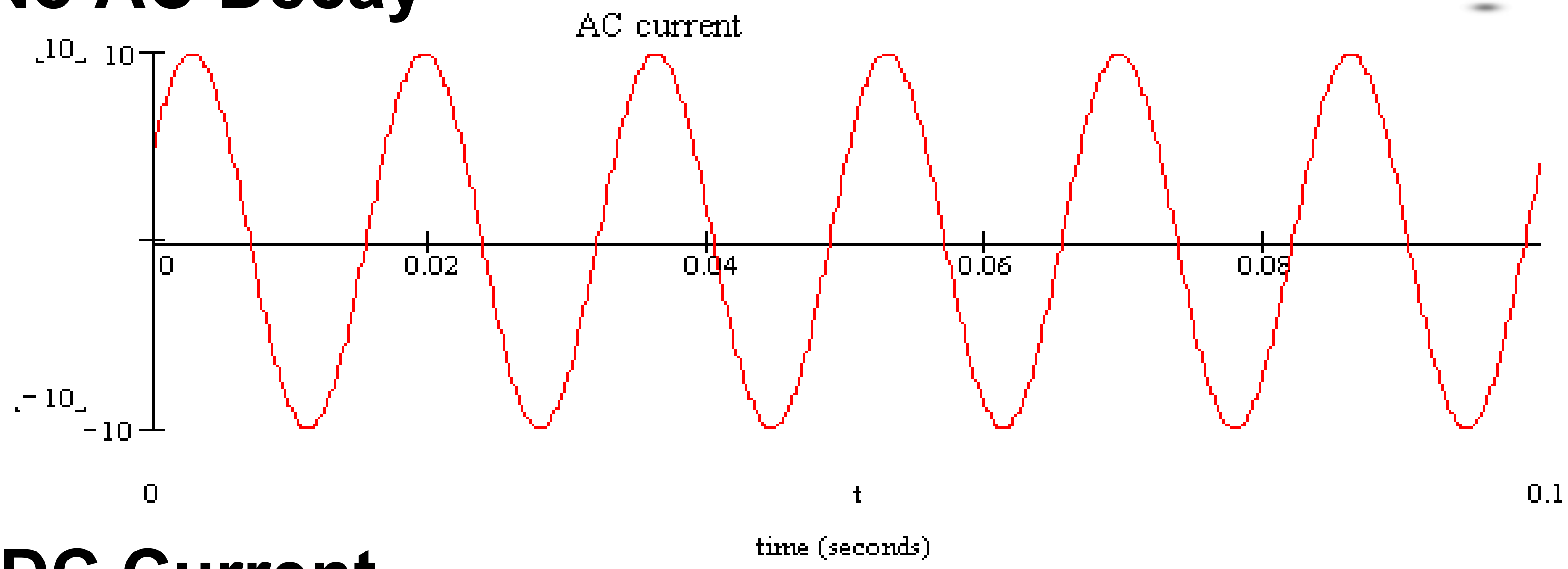

DC Current

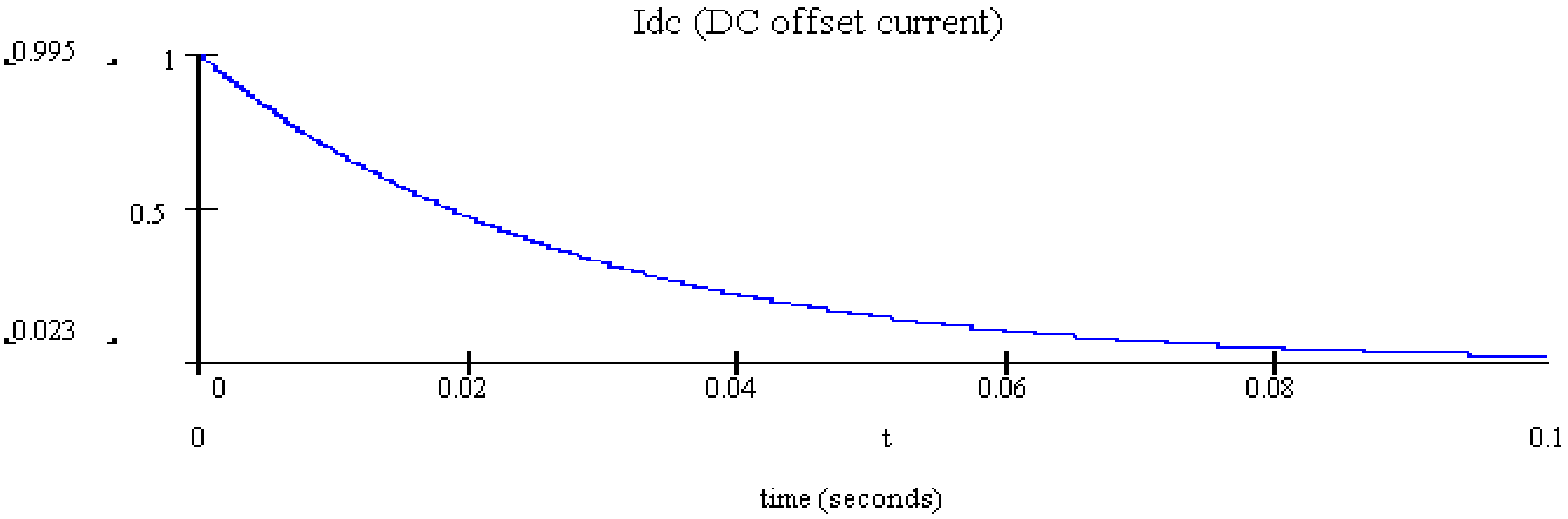

AC Fault Current Including the DC Offset (No AC Decay)

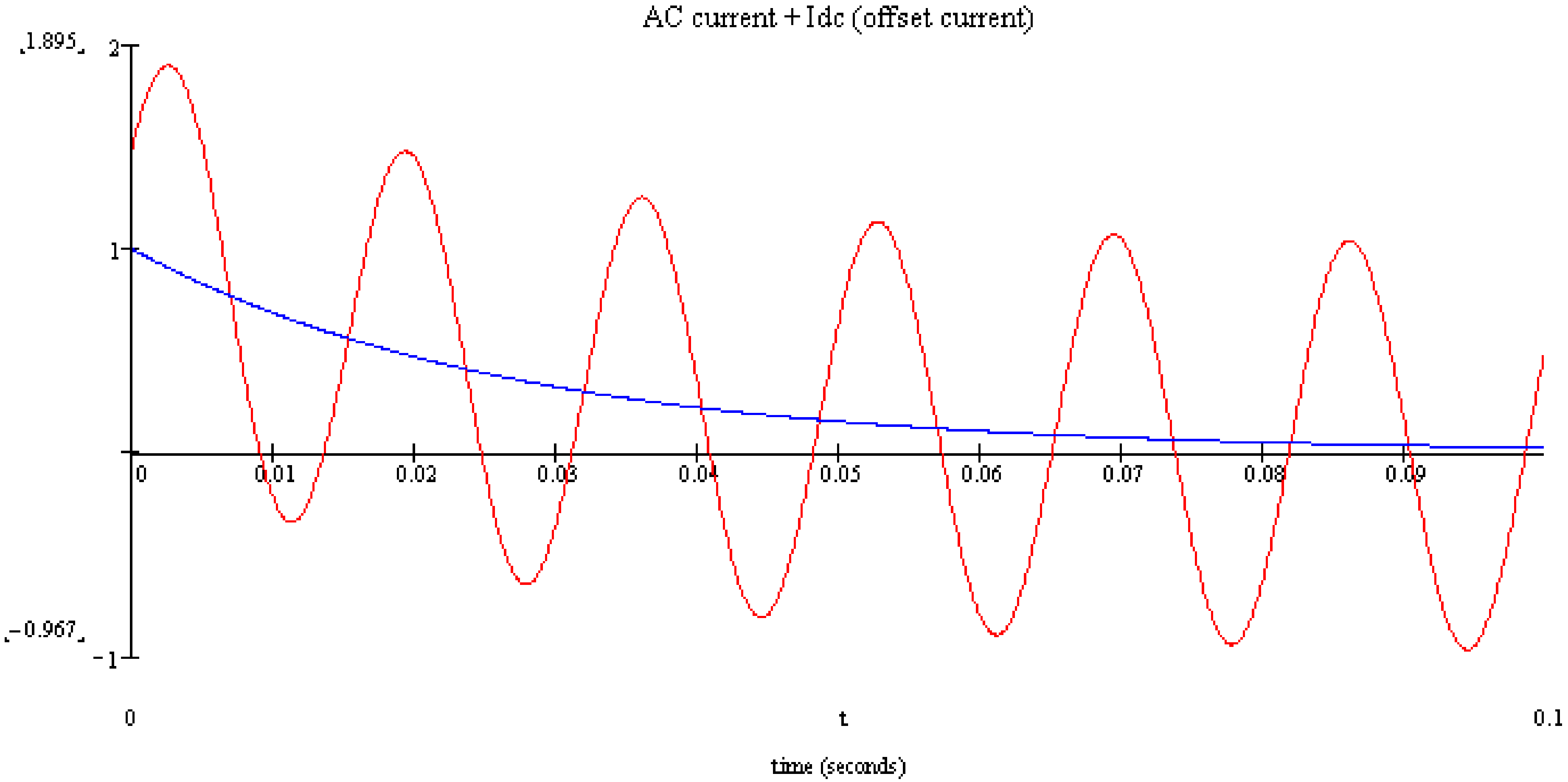

Machine Reactance (λ = L I)

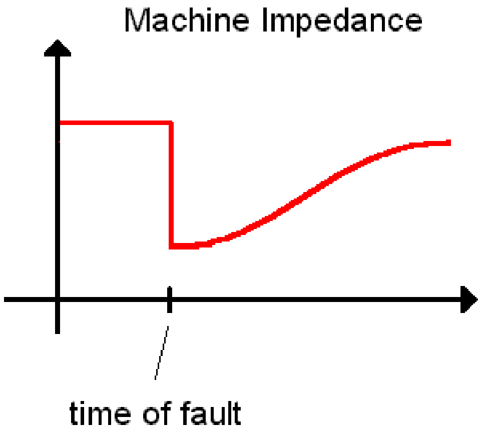

AC Decay Current

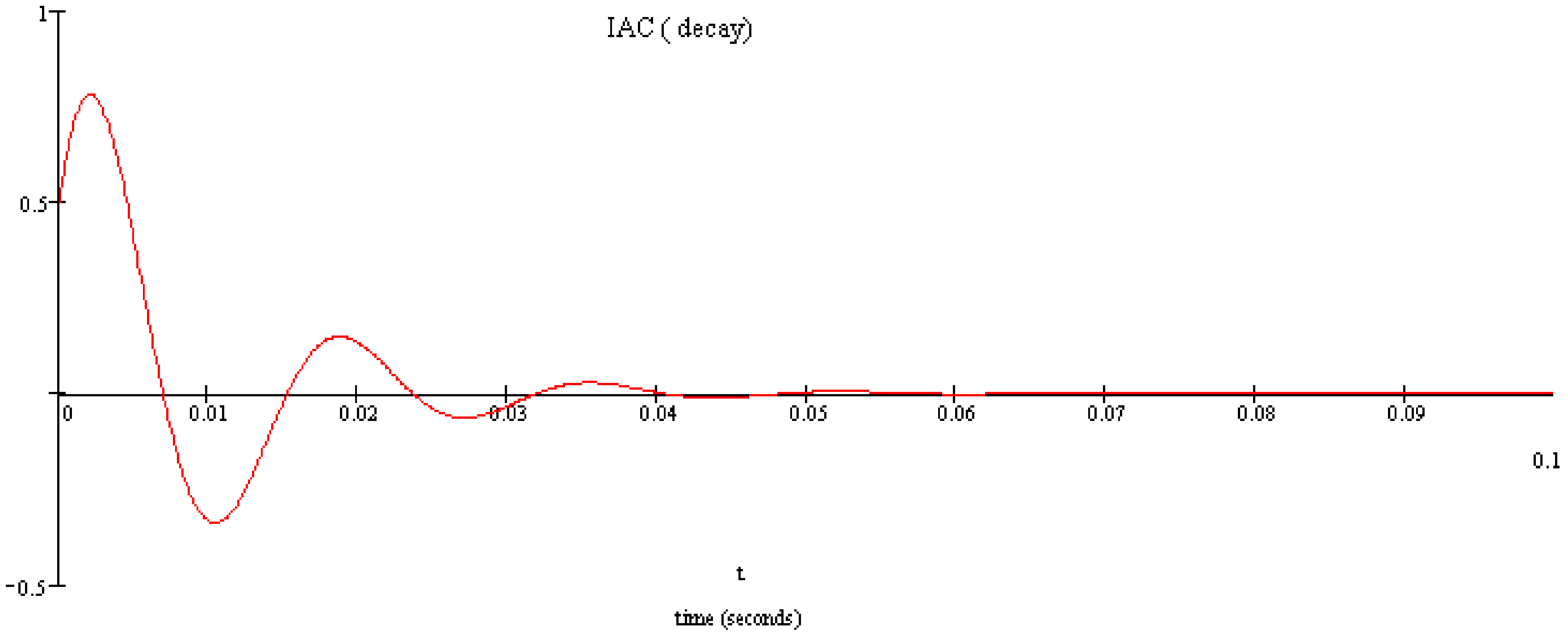

Fault Current Including AC & DC Decay

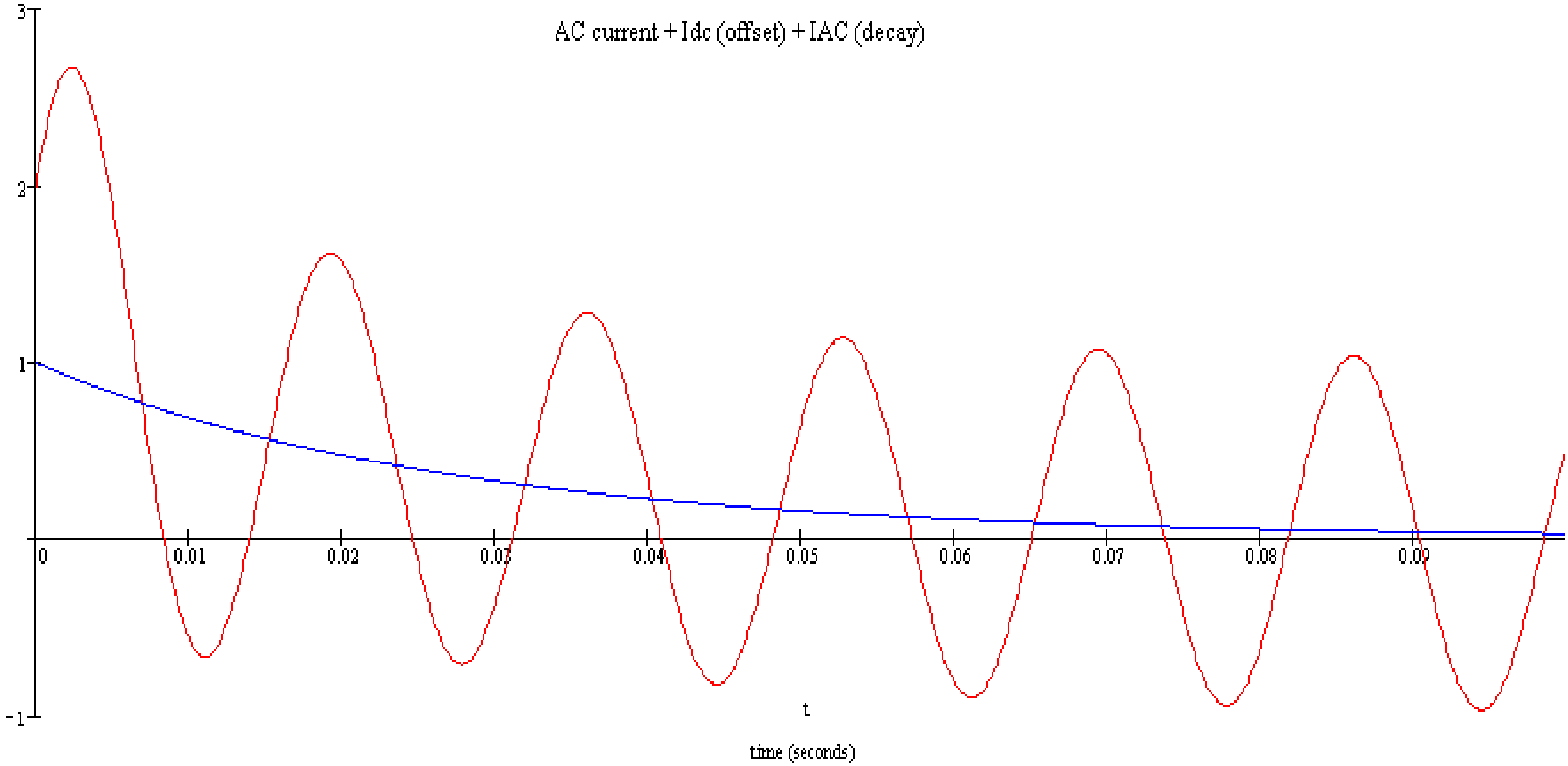

IEC Short-Circuit Calculation (IEC 909)

- Initial Symmetrical Short-Circuit Current (I"k)
- Peak Short-Circuit Current (ip)
- Symmetrical Short-Circuit Breaking Current (Ib)
- Steady-State Short-Circuit Current (Ik)

IEC Short-Circuit Calculation Method

- Ik” = Equivalent V @ fault location divided by equivalent Z
- Equivalent V is based bus nominal kV and c factor
- XFMR and machine Z adjusted based on c_{max}, component Z & operating conditions

Transformer Z Adjustment

- K_T -- Network XFMR
- K_S,K_{SO} – Unit XFMR for faults on system side
- $K_{T,S}$,$K_{T,SO}$ – Unit XFMR for faults in auxiliary system, not between Gen & XFMR
- K=1 – Unit XFMR for faults between Gen & XFMR

Syn Machine Z Adjustment

- K_G – Synchronous machine w/o unit XFMR
- K_S,K_{SO} – With unit XFMR for faults on system side
- $K_{G,S}$,$K_{G,SO}$ – With unit XFMR for faults in auxiliary system, including points between Gen & XFMR

Types of Short-Circuits

- Near-To-Generator Short-Circuit
  - This is a short-circuit condition to which at least one synchronous machine contributes a prospective initial short-circuit current which is more than twice the generator’s rated current, or a short-circuit condition to which synchronous and asynchronous motors contribute more than 5% of the initial symmetrical short-circuit current (I"k) without motors.

Near-To-Generator Short-Circu

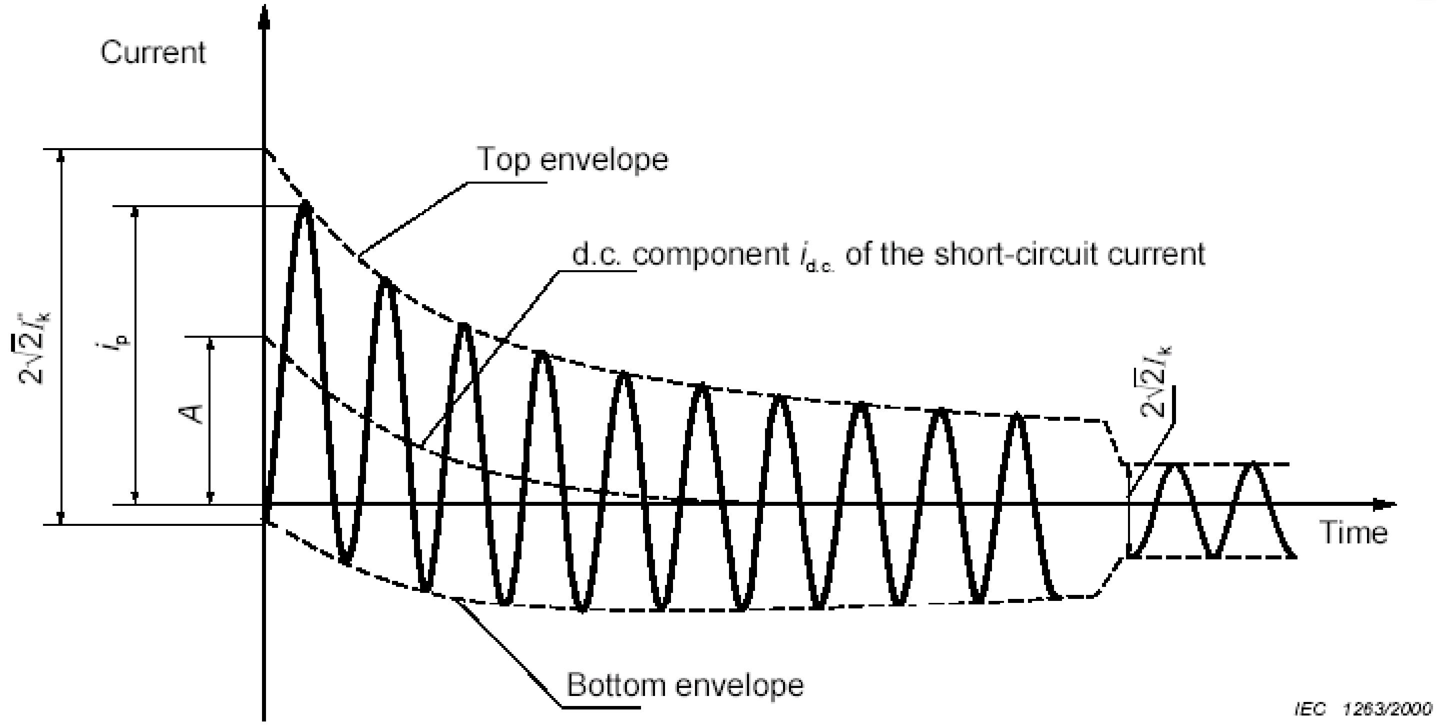
Current
Top envelope
d.c. component $i_{d.c.}$ of the short-circuit current
$2\sqrt{2}I''_k$
i_p
A
$2\sqrt{2}I_k$
Time
Bottom envelope
IEC 1263/2000

I''_k = initial symmetrical short-circuit current

i_p = peak short-circuit current

I_k = steady-state short-circuit current

$i_{d.c.}$ = d.c. component of short-circuit current

A = initial value of the d.c. component $i_{d.c.}$

Figure 2 – Short-circuit current of a near-to-generator short circuit with decaying a.c. component (schematic diagram)

Types of Short-Circuits

- Far-From-Generator Short-Circuit
  - This is a short-circuit condition during which the magnitude of the symmetrical ac component of available short-circuit current remains essentially constant.

Far-From-Generator Short-Circ

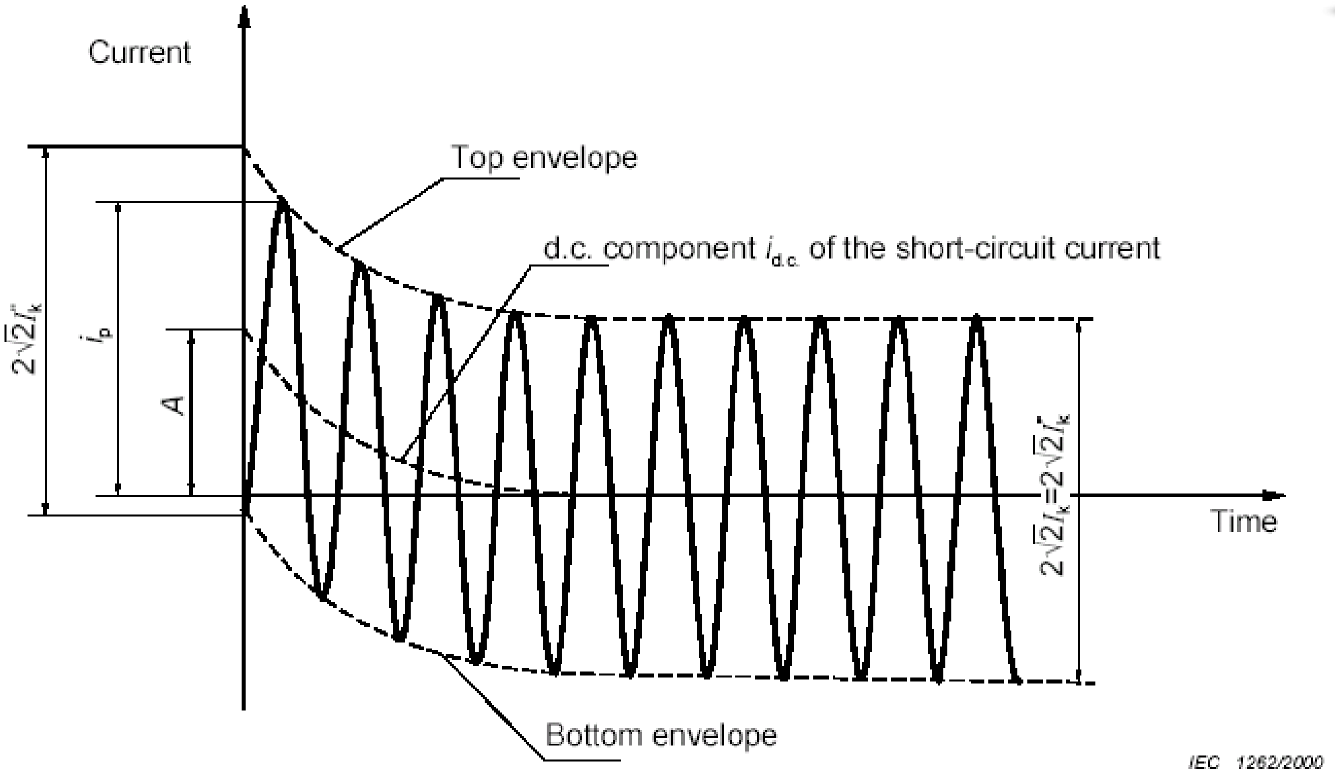

I_k'' = initial symmetrical short-circuit current

i_p = peak short-circuit current

I_k = steady-state short-circuit current

$i_{d.c.}$ = d.c. component of short-circuit current

A = initial value of the d.c. component $i_{d.c.}$

Figure 1 – Short-circuit current of a far-from-generator short circuit

Factors Used in I_f Calc

- κ – calc i_p based on I_k”
- μ – calc i_b for near-to-gen & not meshed network
- q – calc induction machine i_b for near-to-gen & not meshed network
- Equation (75) of Std 60909-0, adjusting Ik for near-to-gen & meshed network
- λ_{min} & λ_{max} – calc i_k

IEC Short-Circuit Study Case

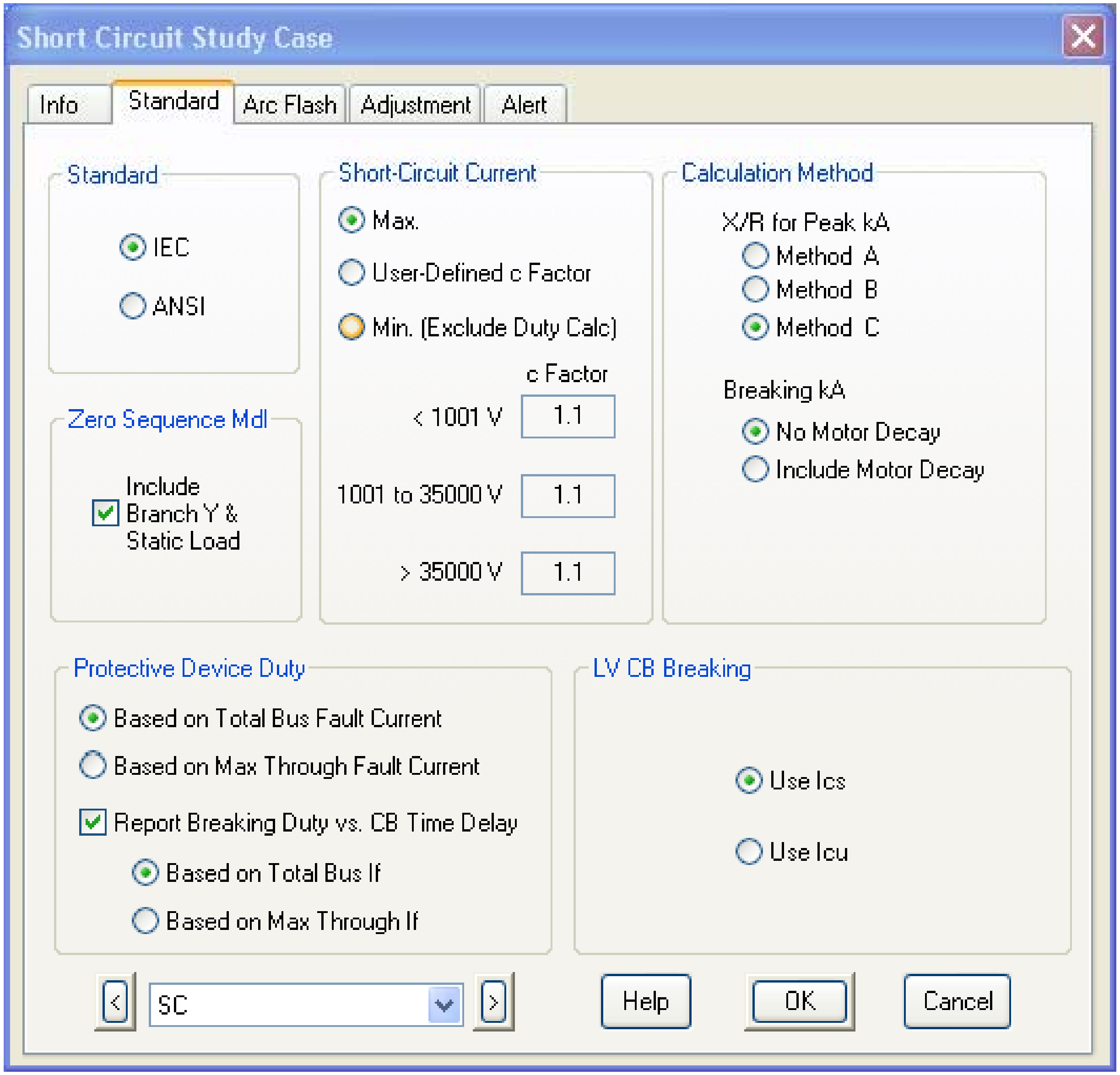
Short Circuit Study Case
Info
Standard
Arc Flash
Adjustment
Alert
Help
OK
Cancel

Standard
● IEC
○ ANSI

Zero Sequence Mdl
☑ Include Branch Y & Static Load

Short-Circuit Current
● Max.
○ User-Defined c Factor
○ Min. (Exclude Duty Calc)

	c Factor
< 1001 V	1.1
1001 to 35000 V	1.1
> 35000 V	1.1

Calculation Method
X/R for Peak kA
○ Method A
○ Method B
● Method C

Breaking kA
● No Motor Decay
○ Include Motor Decay

Protective Device Duty
● Based on Total Bus Fault Current
○ Based on Max Through Fault Current
☑ Report Breaking Duty vs. CB Time Delay
● Based on Total Bus If
○ Based on Max Through If

LV CB Breaking
● Use Ics
○ Use Icu

SC

Types of Short-Circuits

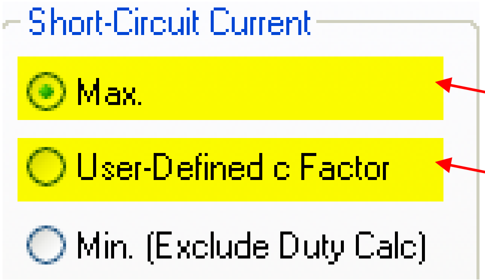

Short-Circuit Current

● Max.

○ User-Defined c Factor

○ Min. (Exclude Duty Calc)

When these options are selected

- Maximum voltage factor is used
- Minimum impedance is used (all negative tolerances are applied and minimum resistance temperature is considered)

Types of Short-Circuits

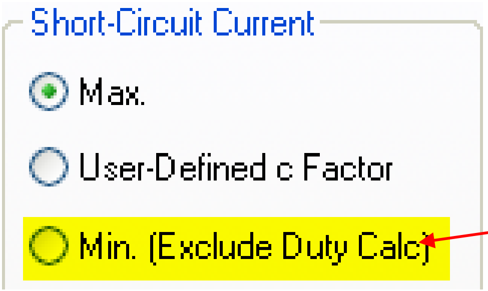

Short-Circuit Current

● Max.

○ User-Defined c Factor

○ Min. (Exclude Duty Calc)

When this option is selected

- Minimum voltage factor is used
- Maximum impedance is used (all positive tolerances are applied and maximum resistance temperature is considered)

Voltage Factor (c)

- Ratio between equivalent voltage & nominal voltage
- Required to account for:
  - Variations due to time & place
  - Transformer taps
  - Static loads & capacitances
  - Generator & motor subtransient behavior

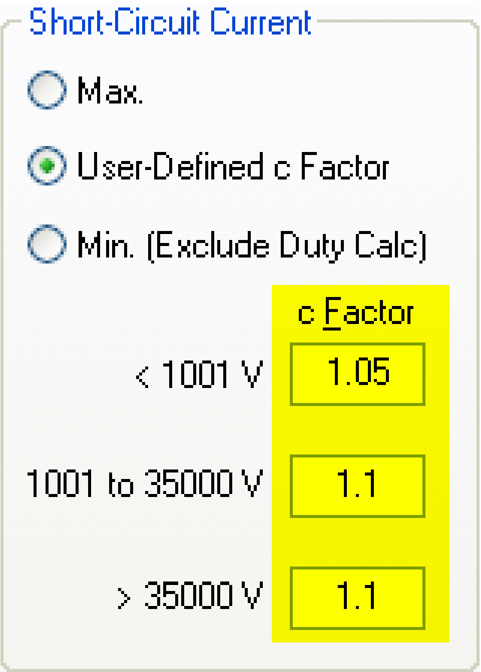

Short-Circuit Current

○ Max.

● User-Defined c Factor

○ Min. (Exclude Duty Calc)

	c Factor
< 1001 V	1.05
1001 to 35000 V	1.1
> 35000 V	1.1

Calculation Method

X/R for Peak Current

- **Method A** – Using the uniform ratio X/R in calculating the peak current
- **Method B** – Using the X/R ratio at the short-circuit location in calculating the peak current
- **Method C** – Using equivalent frequency in calculating the peak current

- Breaking kA is more conservative if the option No Motor Decay is selected

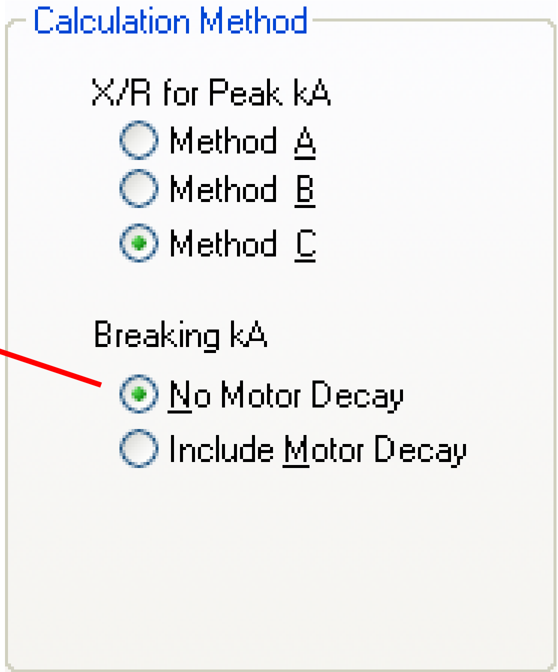

Calculation Method

X/R for Peak kA

○ Method A

○ Method B

● Method C

Breaking kA

● No Motor Decay

○ Include Motor Decay

IEC SC 909 Calculation

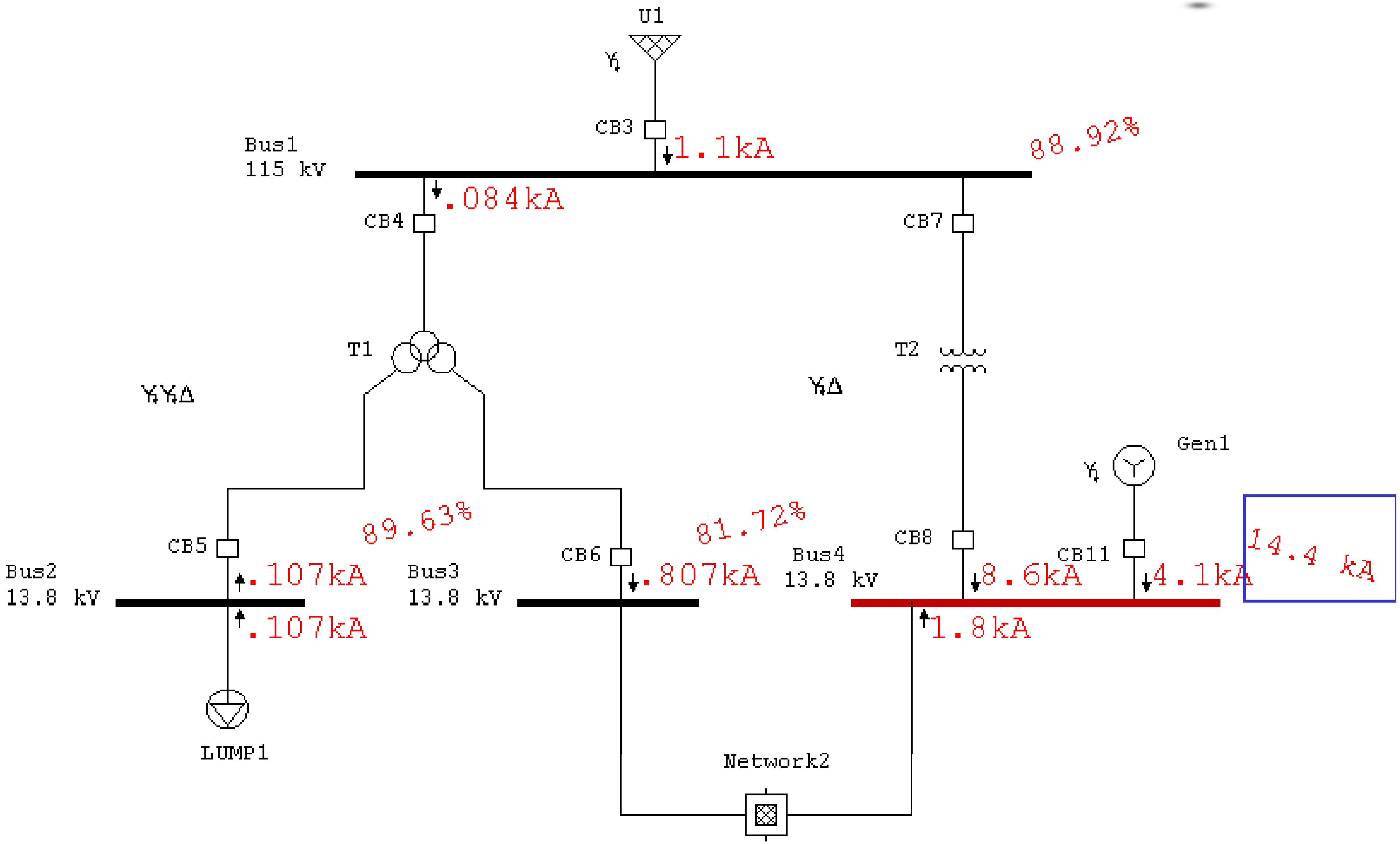
U1
CB3
1.1kA
Bus1
115 kV
88.92%
.084kA
CB4
CB7
T1
T2
YYΔ
YΔ
Gen1
89.63%
81.72%
CB5
CB6
CB8
CB11
14.4 kA
Bus2
13.8 kV
.107kA
.107kA
Bus3
13.8 kV
.807kA
Bus4
13.8 kV
8.6kA
4.1kA
1.8kA
LUMP1
Network2

Device Duty Comparison

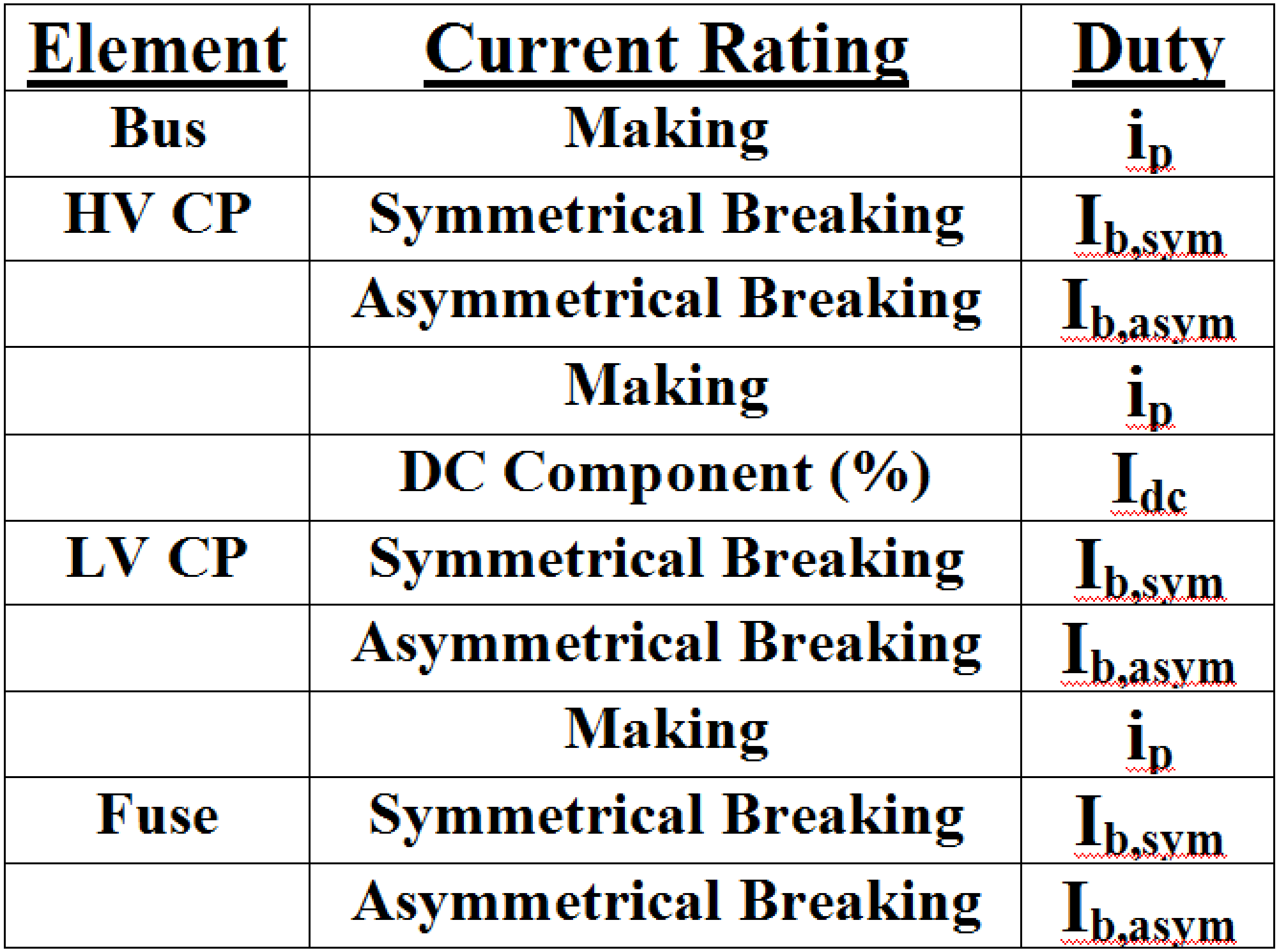

Element	Current Rating	Duty
Bus	Making	i_p
HV CP	Symmetrical Breaking	$I_{b,sym}$
	Asymmetrical Breaking	$I_{b,asym}$
	Making	i_p
	DC Component (%)	I_{dc}
LV CP	Symmetrical Breaking	$I_{b,sym}$
	Asymmetrical Breaking	$I_{b,asym}$
	Making	i_p
Fuse	Symmetrical Breaking	$I_{b,sym}$
	Asymmetrical Breaking	$I_{b,asym}$

Mesh & Non-Mesh I_f

- ETAP automatically determines mesh & non-meshed contributions according to individual contributions

- IEC Short Circuit Mesh Determination Method – 0, 1, or 2 (default)

L-G Faults

L-G Faults

Symmetrical Components

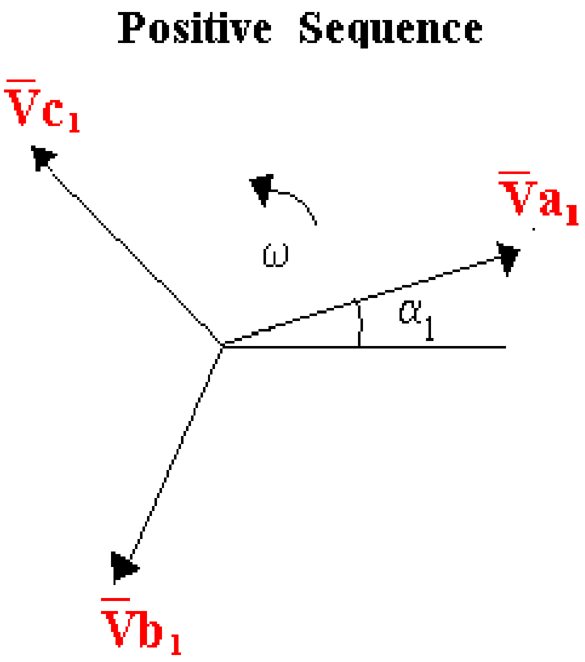
Positive Sequence
$\overline{V}c_1$
$\overline{V}a_1$
ω
α_1
$\overline{V}b_1$

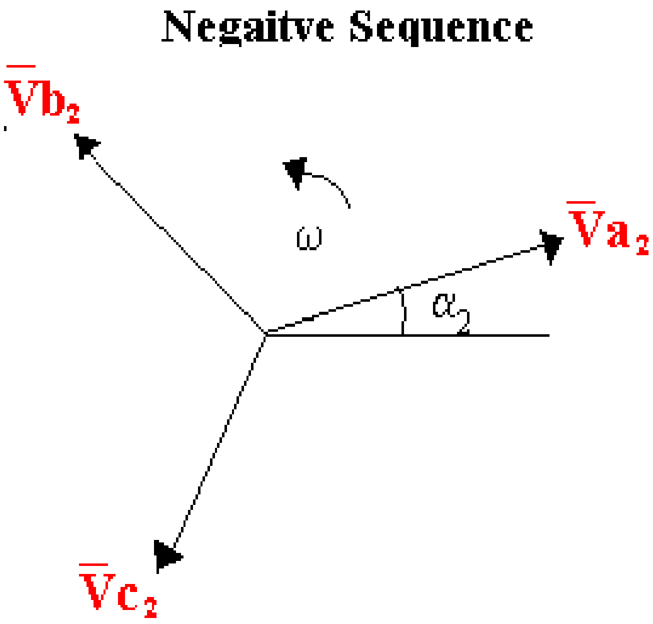
Negaitve Sequence
$\overline{V}b_2$
$\overline{V}a_2$
ω
α_2
$\overline{V}c_2$

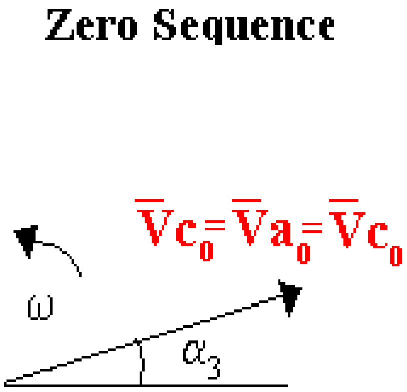
Zero Sequence
$\overline{V}c_0 = \overline{V}a_0 = \overline{V}c_0$
ω
α_3

Sequence Networks

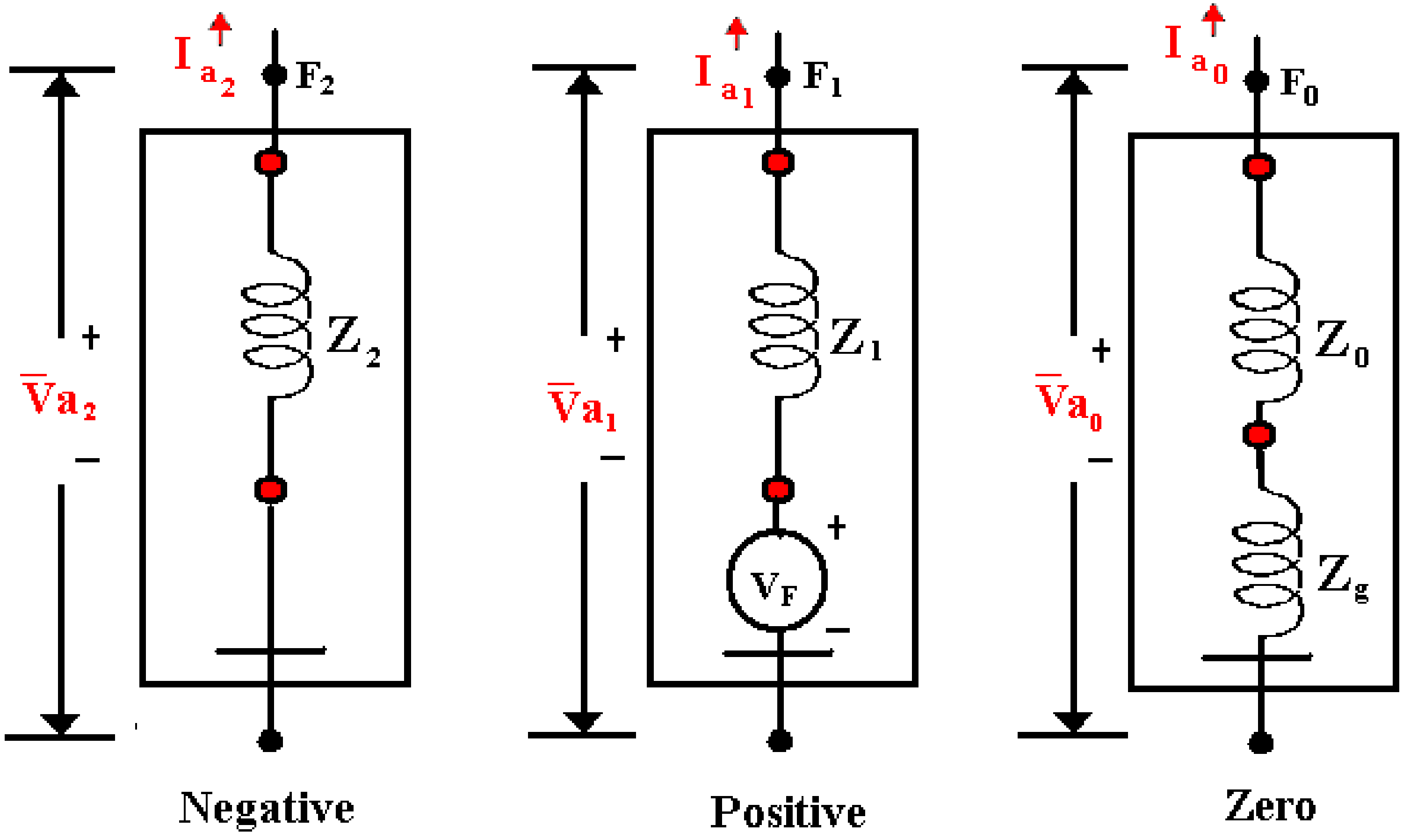
I_{a_2}
F_2
Z_2
+
$\overline{V}a_2$
–
Negative
I_{a_1}
F_1
Z_1
+
$\overline{V}a_1$
–
V_F
+
–
Positive
I_{a_0}
F_0
Z_0
Z_g
+
$\overline{V}a_0$
–
Zero

L-G Fault Sequence Network Connections

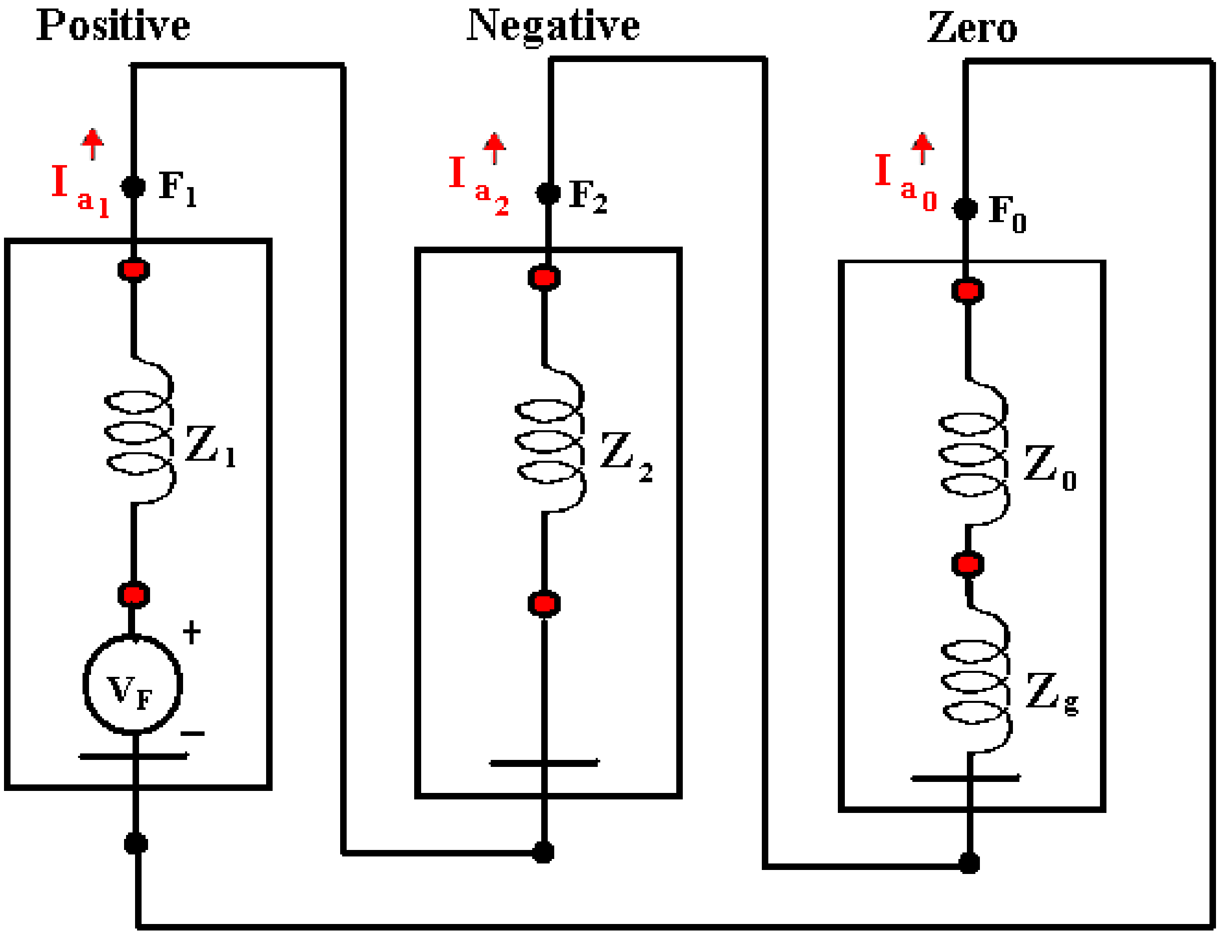
Positive
Negative
Zero
I_{a_1}
F_1
I_{a_2}
F_2
I_{a_0}
F_0
Z_1
Z_2
Z_0
Z_g
V_F
+
−

$$I_f = 3 \times I_{a_0}$$

$$I_f = \frac{3 \times V_{Prefault}}{Z_1 + Z_2 + Z_0}$$

$$\text{if } Z_g = 0$$

L-L Fault Sequence Network Connections

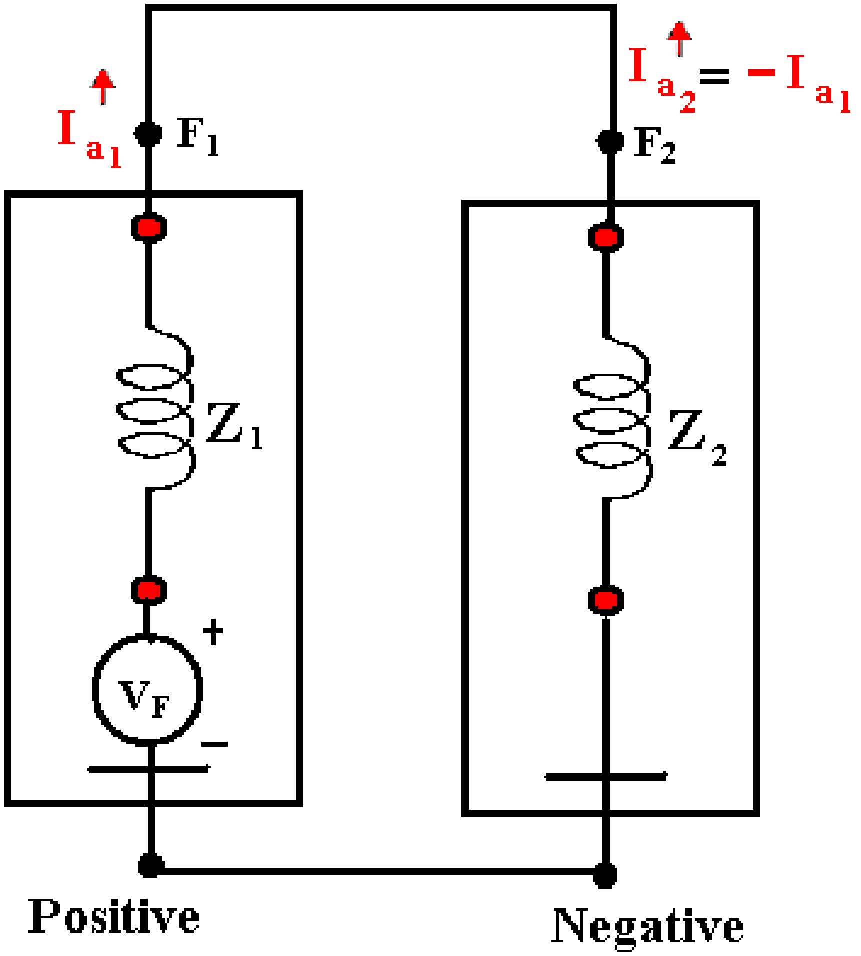
I_{a_1}
F_1
$I_{a_2} = -I_{a_1}$
F_2
Z_1
Z_2
+
V_F
−
Positive
Negative

$$I_{a_2} = -I_{a_1}$$

$$I_f = \frac{\sqrt{3} \times V_{Prefault}}{Z_1 + Z_2}$$

L-L-G Fault Sequence Network Connections

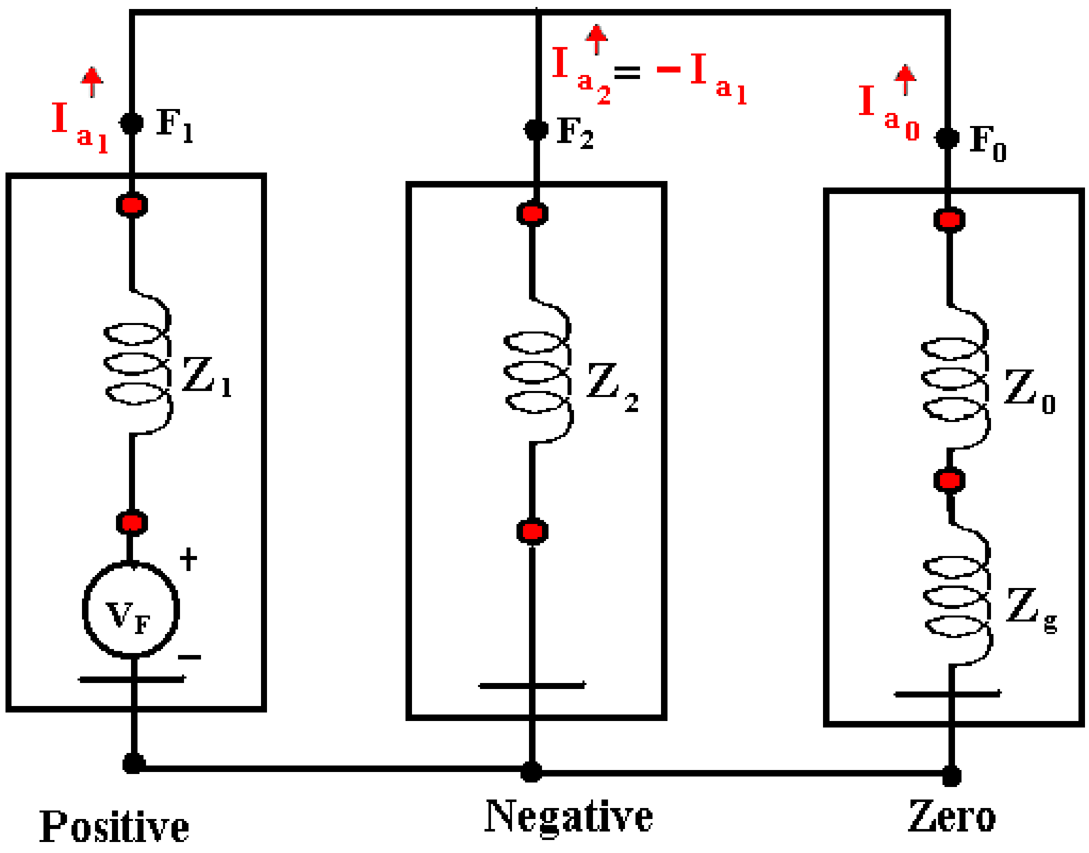
I_{a_1}
F_1
$I_{a_2} = -I_{a_1}$
F_2
I_{a_0}
F_0
Z_1
Z_2
Z_0
Z_g
V_F
+
–
Positive
Negative
Zero

$$I_{a_2} + I_{a_1} + I_{a_0} = 0 = I_a$$

$$I_f = \frac{V_{Prefault}}{Z_1 + \left(\frac{Z_0 Z_2}{Z_0 + Z_2}\right)}$$

$$\text{if } Z_g = 0$$

Transformer Zero Sequence Connections

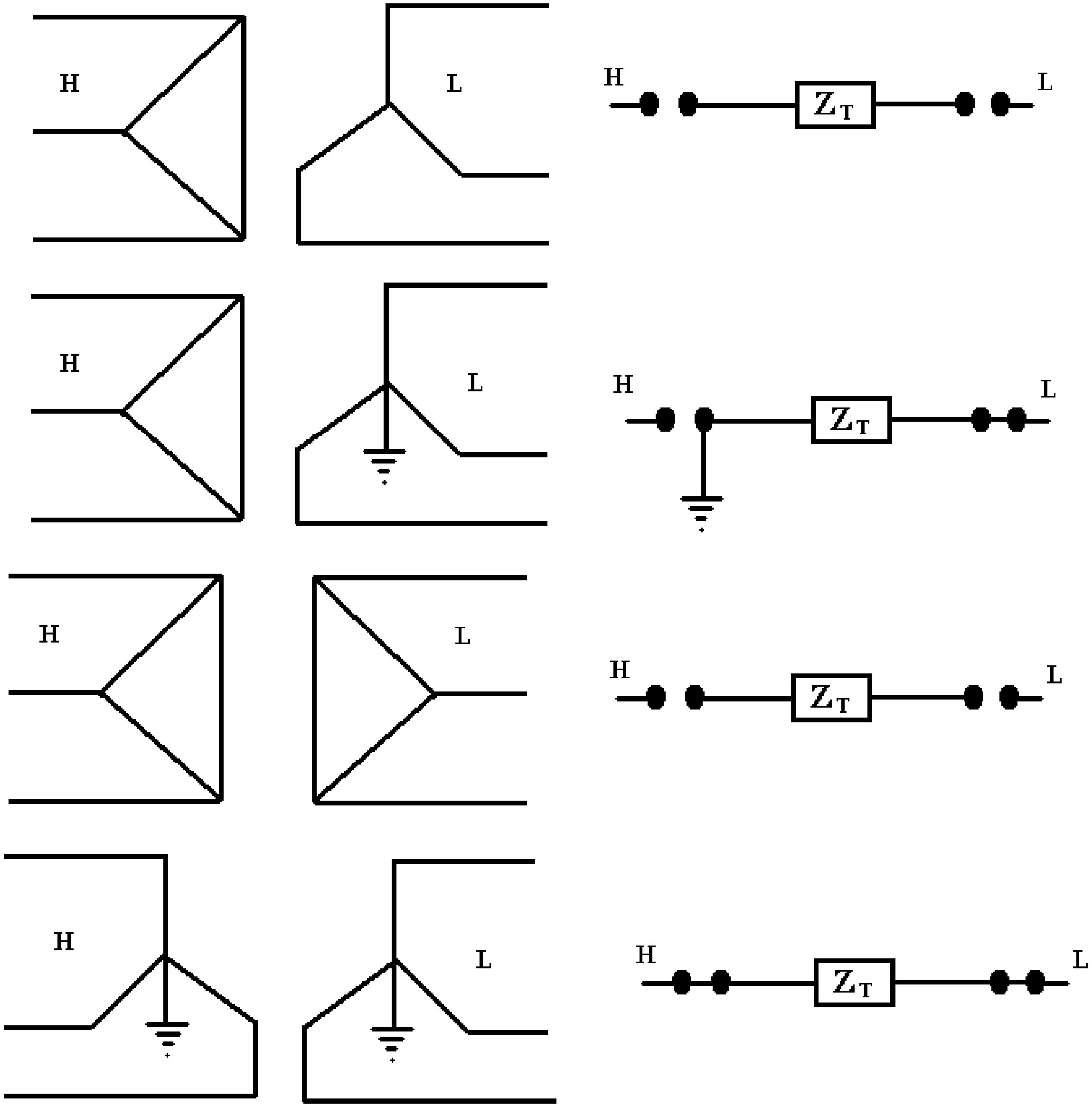
H
L
H
L
Z_T
H
L
H
L
Z_T
H
L
H
L
Z_T
H
L
H
L
Z_T

Solid Grounded Devices and L-G Faults

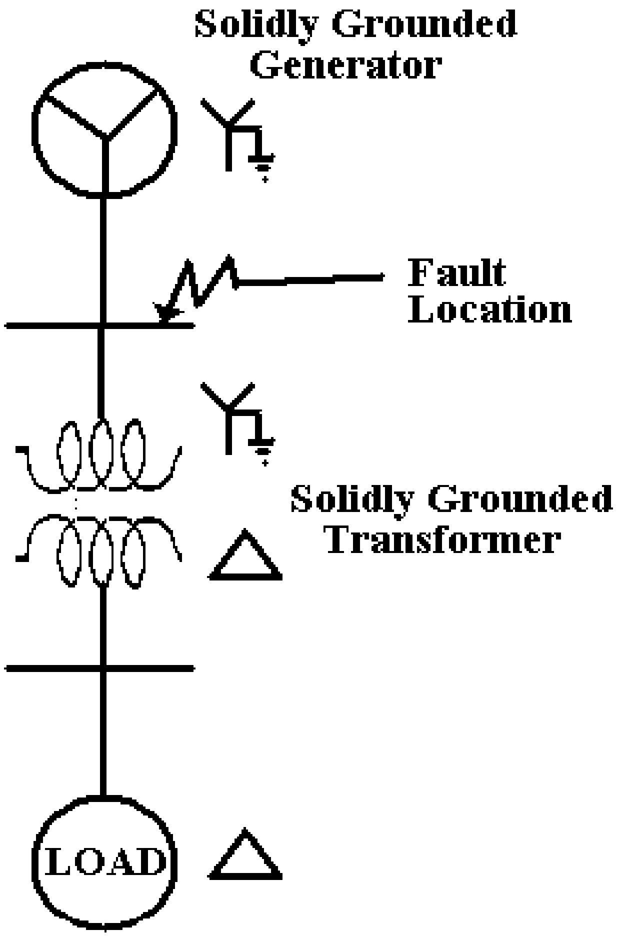
Solidly Grounded Generator
Fault Location
Solidly Grounded Transformer
LOAD

Generally a 3-phase fault is the most severe case. L-G faults can be greater if :

$Z_1 = Z_2 \ \& \ Z_0 < Z_1$

If this conditions are true then :

$\mathrm{I}_{\mathrm{f}3\phi} < I_{f1\phi}$

This may be the case if Generators or Y/Δ Connected transformer are solidly grounded.

Zero Sequence Model

- Branch susceptances and static loads including capacitors will be considered when this option is checked
- Recommended by IEC for systems with isolated neutral, resonant earthed neutrals & earthed neutrals with earth fault factor > 1.4

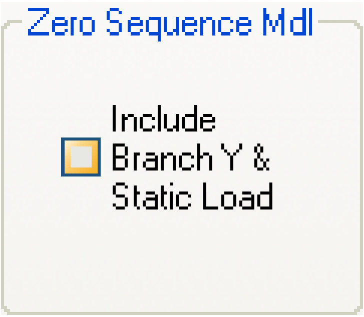
Zero Sequence Mdl
☐ Include Branch Y & Static Load

Unbalanced Faults Display & Reports

Complete reports that include individual branch contributions for:

- L-G Faults
- L-L-G Faults
- L-L Faults

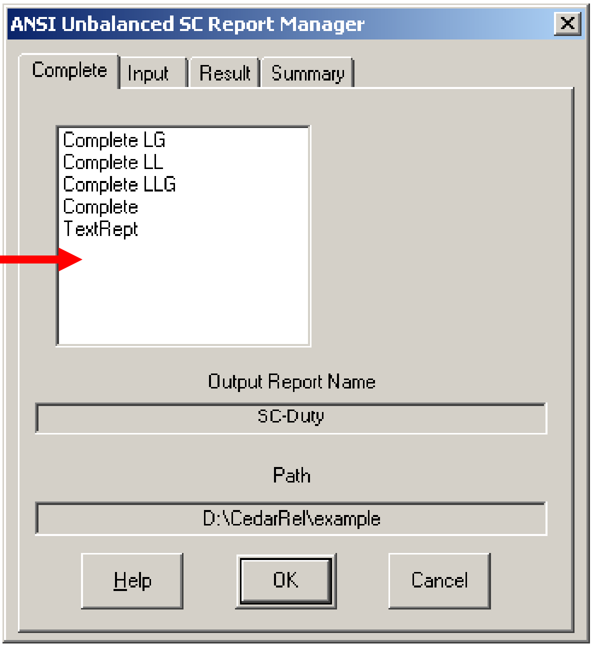
ANSI Unbalanced SC Report Manager
Complete
Input
Result
Summary
Help
OK
Cancel

Complete LG
Complete LL
Complete LLG
Complete
TextRept

Output Report Name: SC-Duty

Path: D:\CedarRel\example

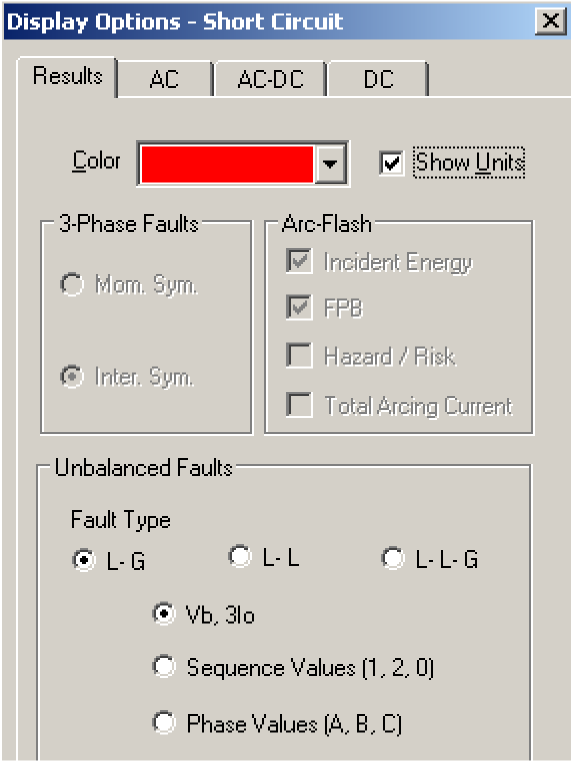
Display Options - Short Circuit
Results
AC
AC-DC
DC

Color: 🟥

☑ Show Units

3-Phase Faults
○ Mom. Sym.
● Inter. Sym.

Arc-Flash
☑ Incident Energy
☑ FPB
☐ Hazard / Risk
☐ Total Arcing Current

Unbalanced Faults

Fault Type
● L-G ○ L-L ○ L-L-G

● Vb, 3Io
○ Sequence Values (1, 2, 0)
○ Phase Values (A, B, C)

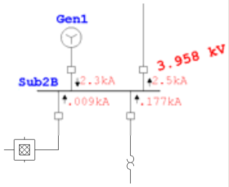
Gen1
Sub2B
3.958 kV
2.3kA
2.5kA
.009kA
.177kA

One-line diagram displayed results that include:

- L-G/L-L-G/L-L fault current contributions
- Sequence voltage and currents
- Phase Voltages

Transient Fault Current Calculation (IEC 61363)

Total Fault Current Waveform

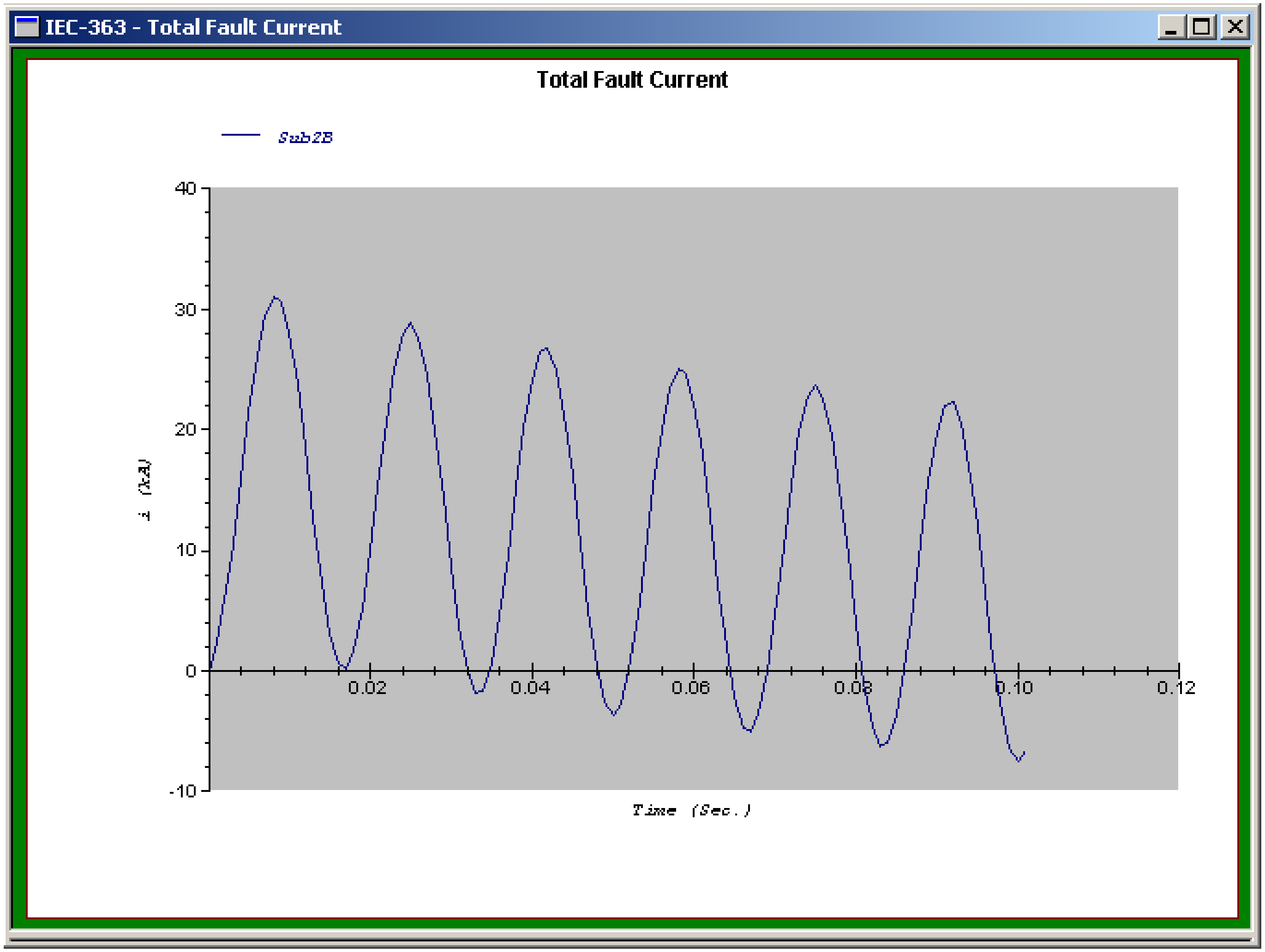

Transient Fault Current Calculation (IEC 61363)

Percent DC Current Waveform

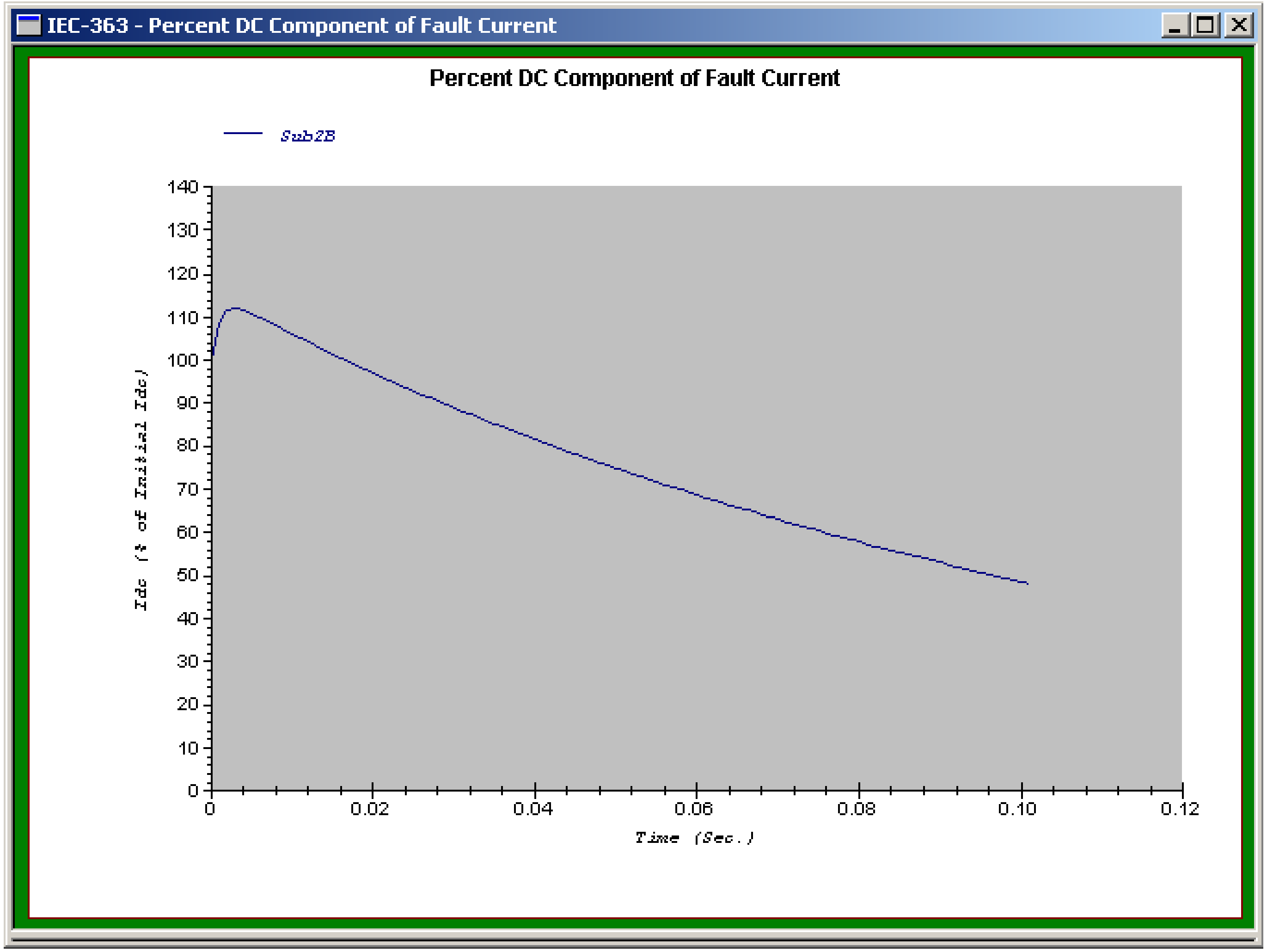

Transient Fault Current Calculation (IEC 61363)

AC Component of Fault Current Waveform

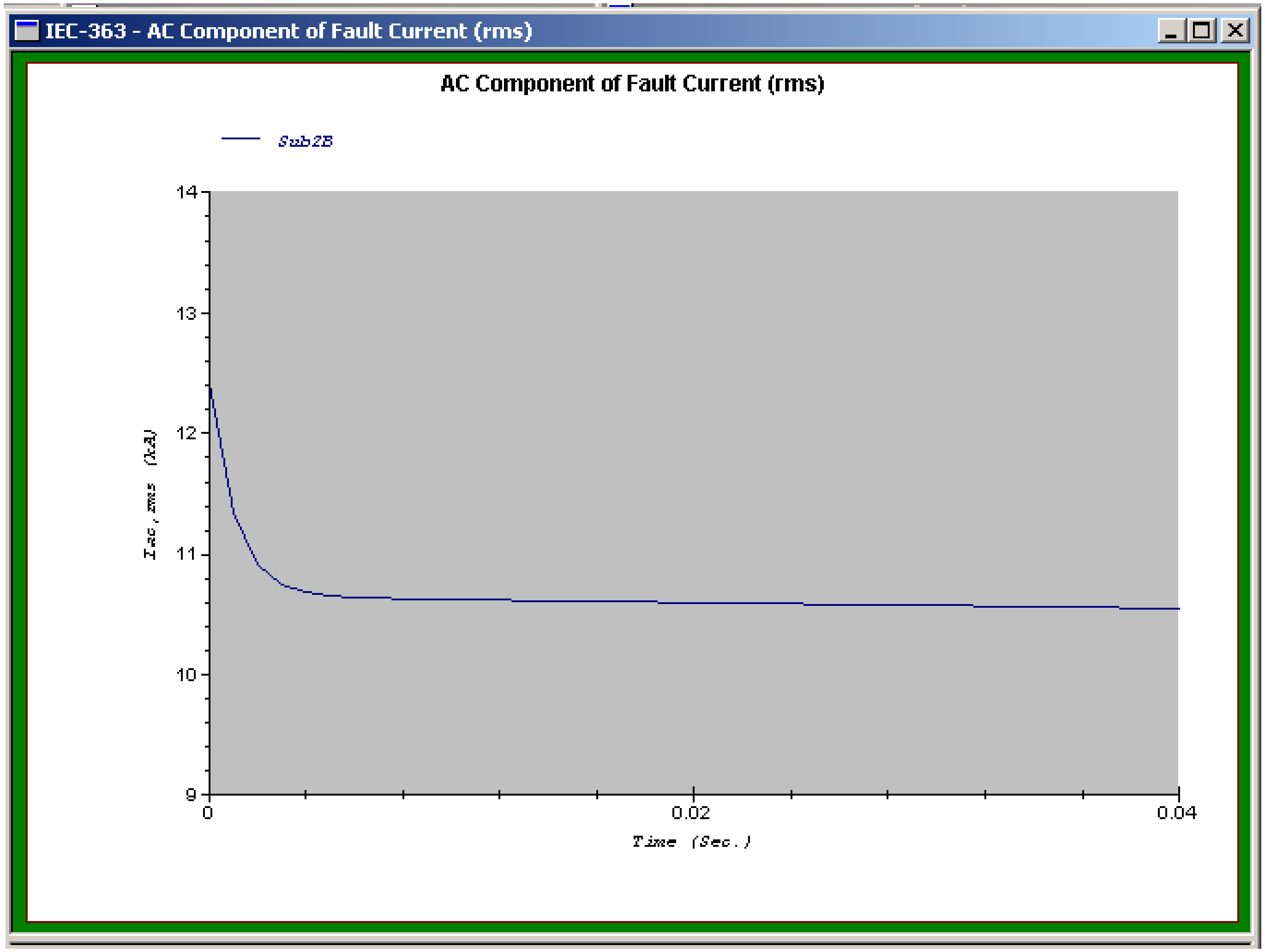

Transient Fault Current Calculation (IEC 61363)

Top Envelope of Fault Current Waveform

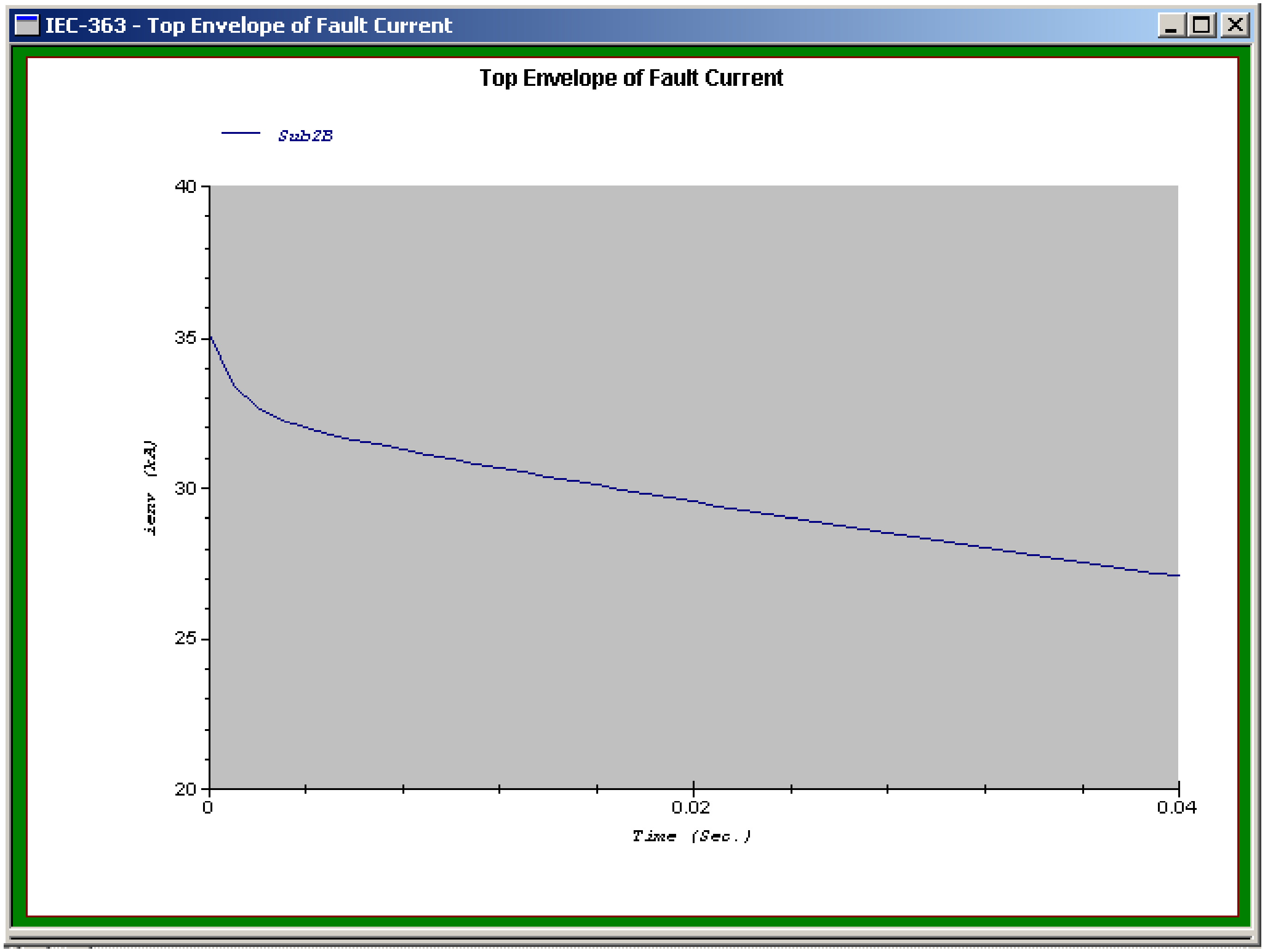

Transient Fault Current Calculation (IEC 61363)

Top Envelope of Fault Current Waveform

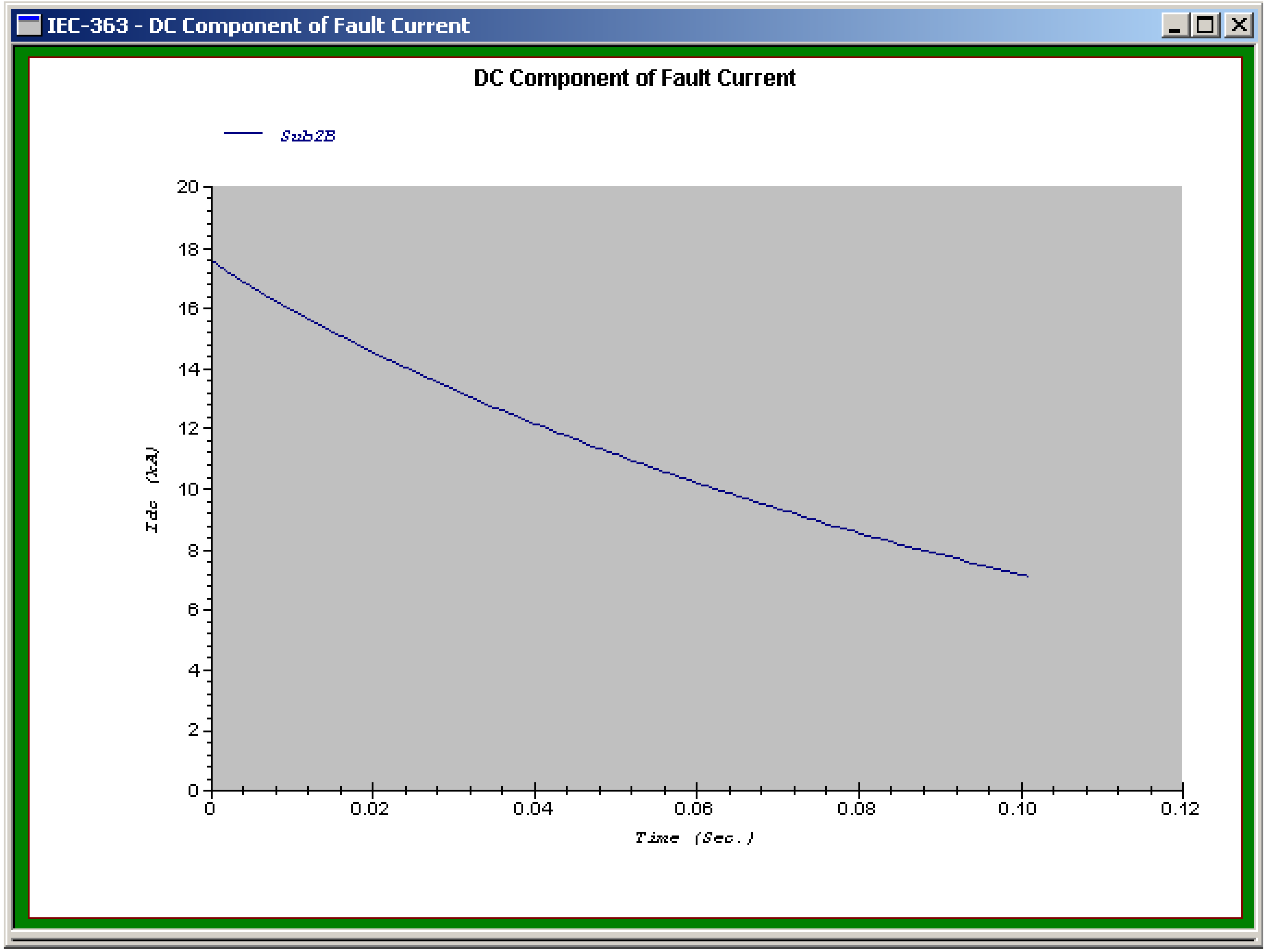

IEC Transient Fault Current Calculation

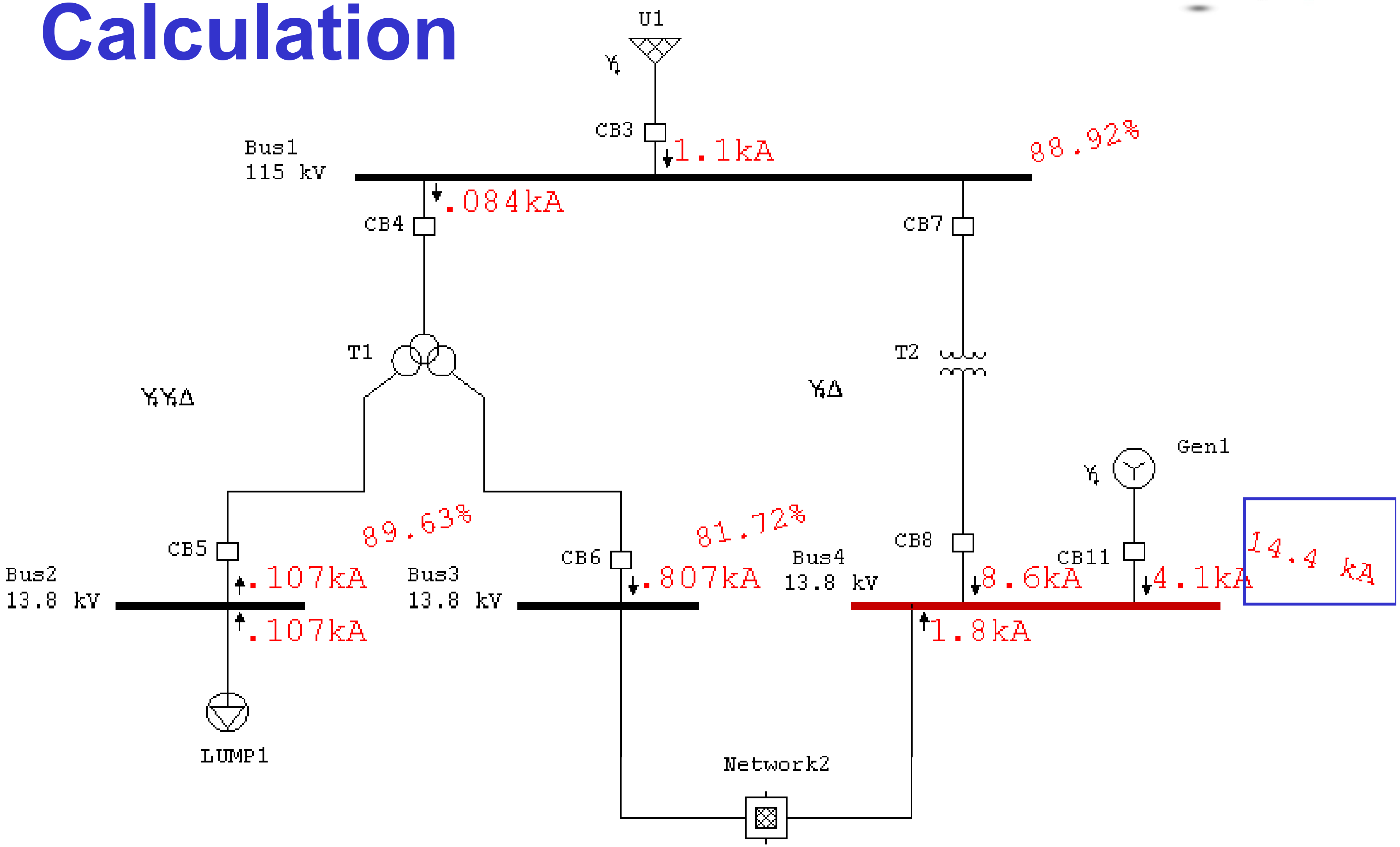
U1
CB3
1.1kA
Bus1
115 kV
88.92%
.084kA
CB4
CB7
T1
T2
YYΔ
YΔ
Gen1
CB5
89.63%
CB6
81.72%
CB8
CB11
14.4 kA
Bus2
13.8 kV
.107kA
Bus3
13.8 kV
.807kA
Bus4
13.8 kV
8.6kA
4.1kA
.107kA
1.8kA
LUMP1
Network2

Unbalanced Faults Display & Reports

Complete reports that include individual branch contributions for:

- L-G Faults
- L-L-G Faults
- L-L Faults

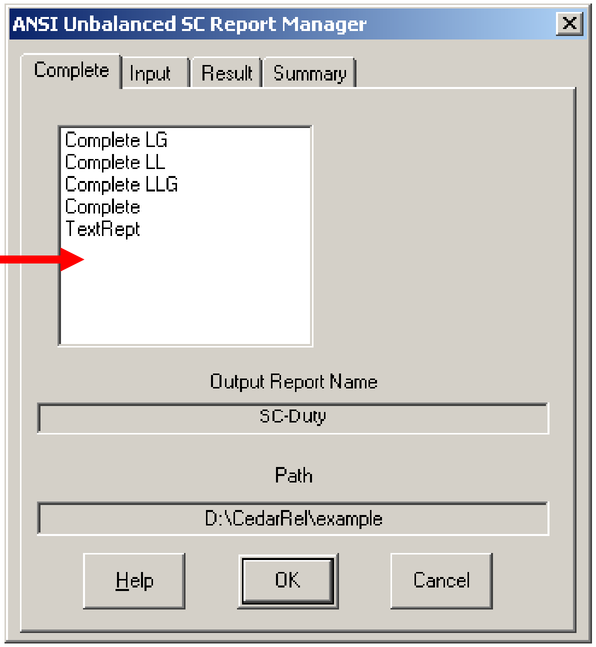
ANSI Unbalanced SC Report Manager

Complete
Input
Result
Summary

Complete LG
Complete LL
Complete LLG
Complete
TextRept

Output Report Name: SC-Duty

Path: D:\CedarRel\example

Help
OK
Cancel

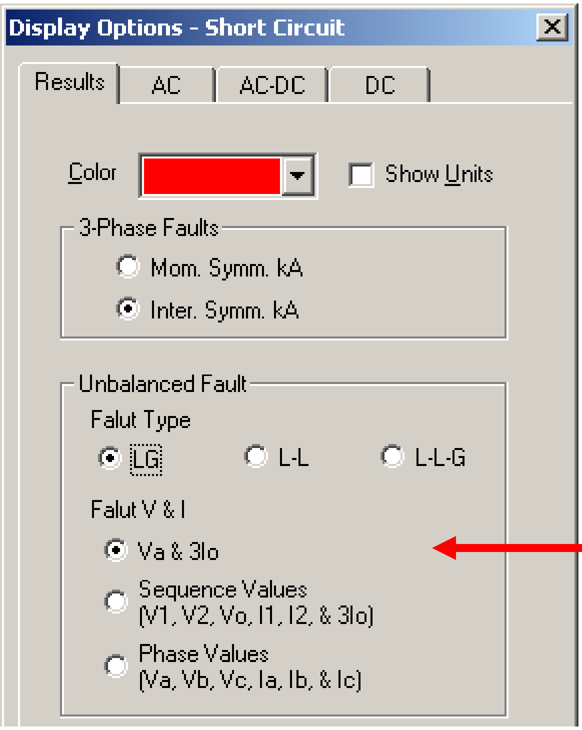
Display Options - Short Circuit

Results
AC
AC-DC
DC

Color 🟥

☐ Show Units

3-Phase Faults

○ Mom. Symm. kA
● Inter. Symm. kA

Unbalanced Fault

Falut Type

● LG ○ L-L ○ L-L-G

Falut V & I

● Va & 3Io
○ Sequence Values (V1, V2, Vo, I1, I2, & 3Io)
○ Phase Values (Va, Vb, Vc, Ia, Ib, & Ic)

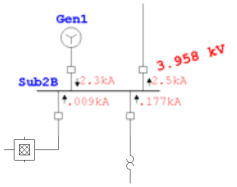
Gen1
Sub2B
3.958 kV
2.3kA
2.5kA
.009kA
.177kA

One-line diagram displayed results that include:

- L-G/L-L-G/L-L fault current contributions
- Sequence voltage and currents
- Phase Voltages

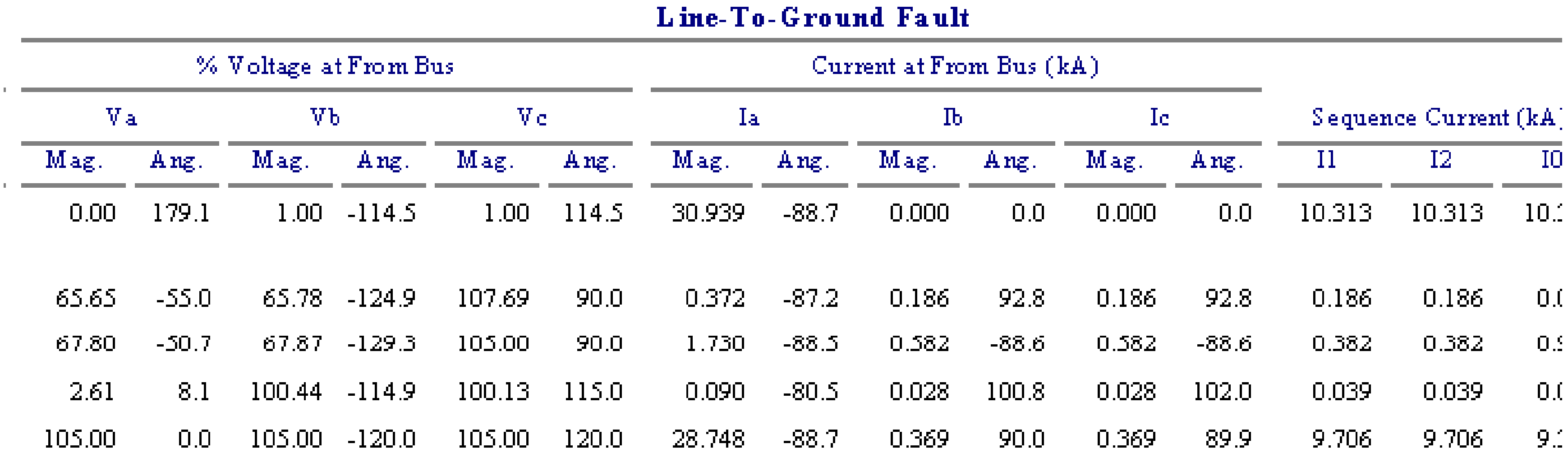

Line-To-Ground Fault

% Voltage at From Bus						Current at From Bus (kA)								
Va		Vb		Vc		Ia		Ib		Ic		Sequence Current (kA		
Mag.	Ang.	Mag.	Ang.	Mag.	Ang.	Mag.	Ang.	Mag.	Ang.	Mag.	Ang.	I1	I2	I0
0.00	179.1	1.00	-114.5	1.00	114.5	30.939	-88.7	0.000	0.0	0.000	0.0	10.313	10.313	10.
65.65	-55.0	65.78	-124.9	107.69	90.0	0.372	-87.2	0.186	92.8	0.186	92.8	0.186	0.186	0.
67.80	-50.7	67.87	-129.3	105.00	90.0	1.730	-88.5	0.582	-88.6	0.582	-88.6	0.382	0.382	0.
2.61	8.1	100.44	-114.9	100.13	115.0	0.090	-80.5	0.028	100.8	0.028	102.0	0.039	0.039	0.
105.00	0.0	105.00	-120.0	105.00	120.0	28.748	-88.7	0.369	90.0	0.369	89.9	9.706	9.706	9.

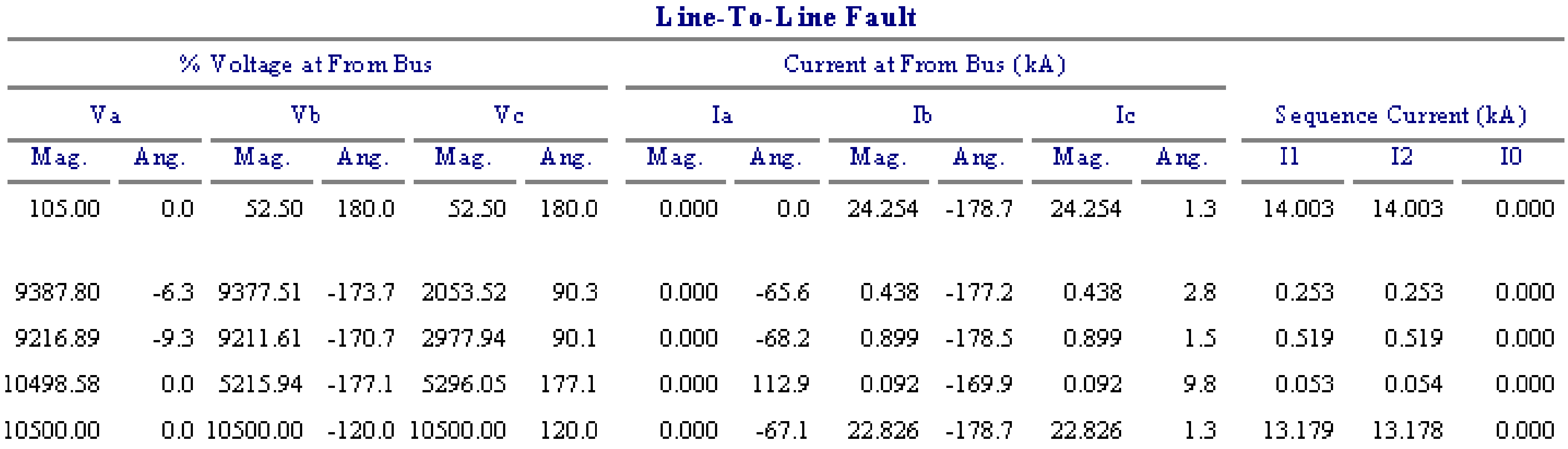

Line-To-Line Fault

% Voltage at From Bus						Current at From Bus (kA)								
Va		Vb		Vc		Ia		Ib		Ic		Sequence Current (kA)		
Mag.	Ang.	Mag.	Ang.	Mag.	Ang.	Mag.	Ang.	Mag.	Ang.	Mag.	Ang.	I1	I2	I0
105.00	0.0	52.50	180.0	52.50	180.0	0.000	0.0	24.254	-178.7	24.254	1.3	14.003	14.003	0.000
9387.80	-6.3	9377.51	-173.7	2053.52	90.3	0.000	-65.6	0.438	-177.2	0.438	2.8	0.253	0.253	0.000
9216.89	-9.3	9211.61	-170.7	2977.94	90.1	0.000	-68.2	0.899	-178.5	0.899	1.5	0.519	0.519	0.000
10498.58	0.0	5215.94	-177.1	5296.05	177.1	0.000	112.9	0.092	-169.9	0.092	9.8	0.053	0.054	0.000
10500.00	0.0	10500.00	-120.0	10500.00	120.0	0.000	-67.1	22.826	-178.7	22.826	1.3	13.179	13.178	0.000

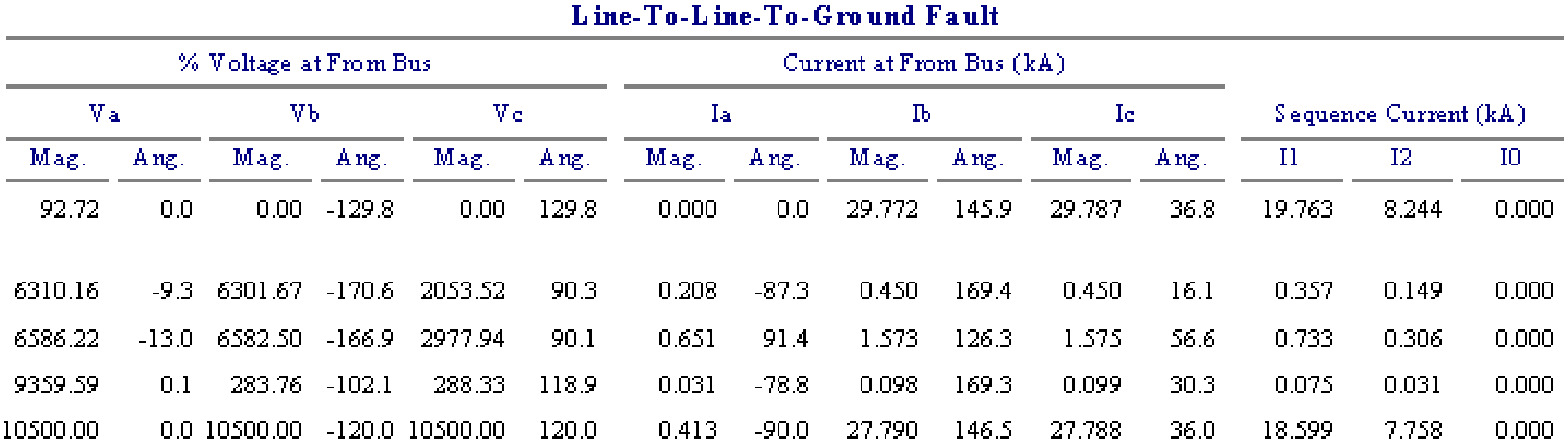

Line-To-Line-To-Ground Fault

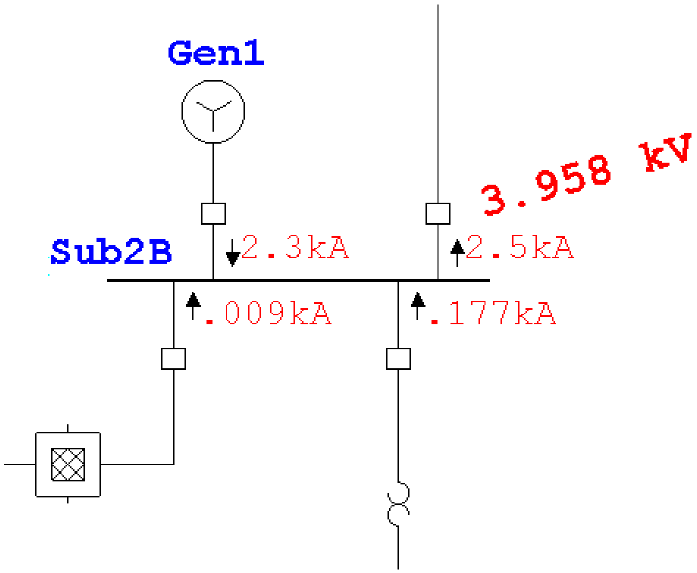% Voltage at From Bus						Current at From Bus (kA)								
Va		Vb		Vc		Ia		Ib		Ic		Sequence Current (kA)		
Mag.	Ang.	Mag.	Ang.	Mag.	Ang.	Mag.	Ang.	Mag.	Ang.	Mag.	Ang.	I1	I2	I0
92.72	0.0	0.00	-129.8	0.00	129.8	0.000	0.0	29.772	145.9	29.787	36.8	19.763	8.244	0.000
6310.16	-9.3	6301.67	-170.6	2053.52	90.3	0.208	-87.3	0.450	169.4	0.450	16.1	0.357	0.149	0.000
6586.22	-13.0	6582.50	-166.9	2977.94	90.1	0.651	91.4	1.573	126.3	1.575	56.6	0.733	0.306	0.000
9359.59	0.1	283.76	-102.1	288.33	118.9	0.031	-78.8	0.098	169.3	0.099	30.3	0.075	0.031	0.000
10500.00	0.0	10500.00	-120.0	10500.00	120.0	0.413	-90.0	27.790	146.5	27.788	36.0	18.599	7.758	0.000